United States Patent [19]

Cha

[11] **Patent Number: 4,767,229**

[45] **Date of Patent: Aug. 30, 1988**

[54] **DRIP AND SPLATTER PROOF PAINT APPLICATOR**

[76] Inventor: **Edward Cha,** 15 Marwood Rd. South, Port Washington, N.Y. 11050

[21] Appl. No.: **109,414**

[22] Filed: **Oct. 16, 1987**

[51] **Int. Cl.**[4] **B05C 17/00;** B05C 17/02

[52] **U.S. Cl.** **401/208;** 401/21; 401/22; 401/218

[58] **Field of Search** 401/208, 218, 21, 22

[56] **References Cited**

U.S. PATENT DOCUMENTS

154,195	8/1874	Smith	401/208
206,909	8/1878	Weber	401/208
339,529	4/1886	Cranston	401/208
4,555,195	11/1985	de Vreeze et al.	401/218

FOREIGN PATENT DOCUMENTS

164764	1/1981	Netherlands	401/218
676595	7/1952	United Kingdom	401/218

Primary Examiner—Steven A. Bratlie

Attorney, Agent, or Firm—Michael I. Kroll

[57] **ABSTRACT**

A drip and splatter proof paint applicator is provided. The paint is placed and contained within a housing so as to be dispensed therefrom by an endless belt paint roller unit. The paint roller unit can be quickly disengaged therefrom so that the residue paint within the housing and on the paint roller unit can be cleaned after each use.

3 Claims, 1 Drawing Sheet

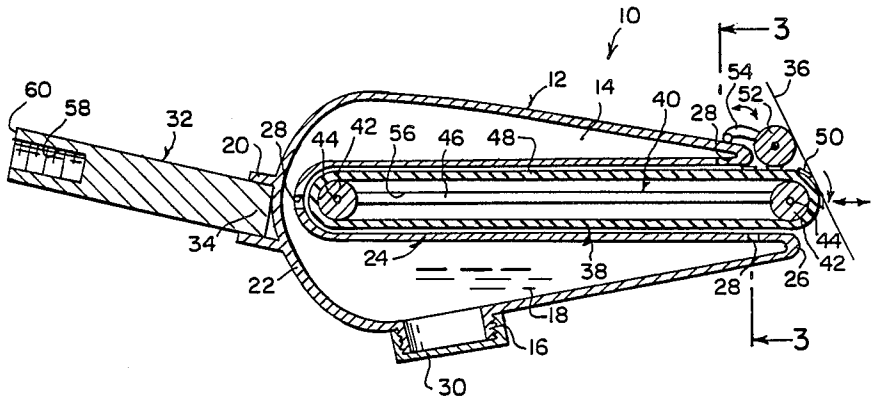

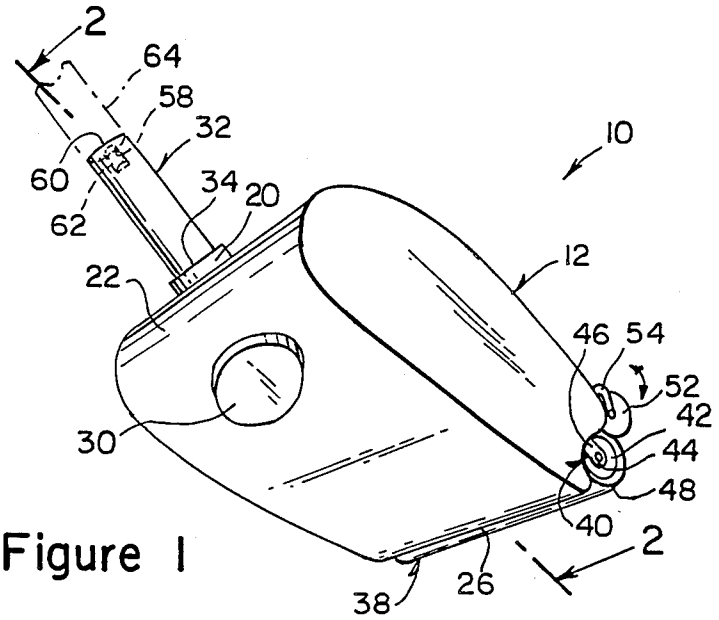

Figure 1

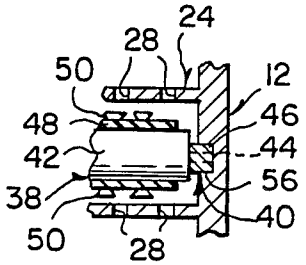

Figure 3

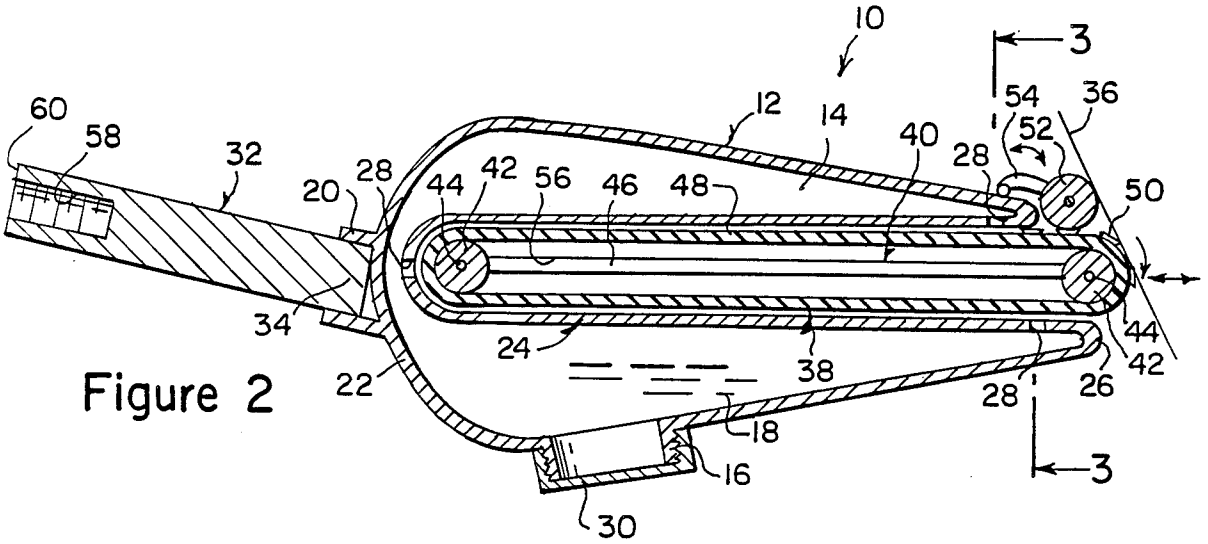

Figure 2

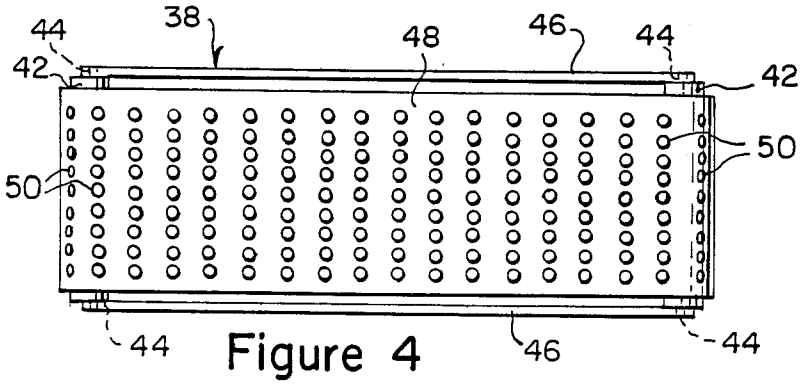

Figure 4

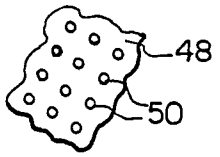

Figure 5

DRIP AND SPLATTER PROOF PAINT APPLICATOR

BACKGROUND OF THE INVENTION

1. Field of the Invention

The instant invention relates generally to painting tools and more specifically it relates to a drip and splatter proof paint applicator.

2. Description of the Prior Art

Numerous painting tools have been provided in prior art that are adapted to aid in applying paint to surfaces in need of paint, but can drip and splatter the paint when being used. While these units may be suitable for the particular purpose to which they address, they would not be as suitable for the purposes of the present invention as heretofore described.

SUMMARY OF THE INVENTION

A primary object of the present invention is to provide a drip and splatter proof paint applicator that will overcome the shortcomings of the prior art devices.

Another object is to provide a drip and splatter proof paint applicator in which the paint is placed and contained therein so as to be quickly dispensed therefrom without making a mess thus eliminating drop cloths.

An additional object is to provide a drip and splatter proof paint applicator in which the paint roller unit can be removed therefrom so that the paint within applicator can be cleaned out after each use of the applicator.

A further object is to provide a drip and splatter proof paint applicator that is simple and easy to use.

A still further object is to provide a drip and splatter proof paint applicator that is economical in cost to manufacture.

Further objects of the invention will appear as the description proceeds.

To the accomplishment of the above and related objects, this invention may be embodied in the form illustrated in the accompanying drawings, attention being called to the fact, however, that the drawings are illustrative only, and that changes may be made in the specific construction illustrated and described within the scope of the appended claims.

BRIEF DESCRIPITON OF THE DRAWING FIGURES

FIG. **1** is a perspective view of the invention.

FIG. **2** is a cross sectional view taken along line **2—2** in FIG. **1**, showing the internal structure in greater detail.

FIG. **3** is a cross sectional view taken along line **3—3** in FIG. **2** with parts broken away.

FIG. **4** is a top view of the removable paint roller unit showing the rows of tiny suction cups on the belt.

FIG. **5** is a partial top view of the belt of the removable paint roller unit showing the tiny suction cups in a diamond shaped pattern.

DETAILED DESCRIPTION OF THE PREFERRED EMBODIMENTS

Turning now descriptively to the drawings, in which similar reference characters denote similar elements throughout the several views, FIGS. **1** through **5** illustrate a drip and splatter proof paint applicator **10** consisting of a housing **12** that has a hollow chamber **14**, a filler neck **16** on one side for receiving paint **18** within the chamber **14**, a collar **20** positioned at a slight angle

at rear end **22** and a recessed portion **24** extending inwardly from front end **26** into the chamber **14**. The recessed portion **24** has a plurality of holes **28** extending across its width in various locations for allowing the paint to exit from the chamber **14** when the housing **12** is placed in any position. A cap **30** attaches to the filler neck **16** of the housing **12** for sealing the paint within the chamber **14**. A handle **32** is attached at one end **34** to the collar **20** of the housing **12** so that a person (not shown) can grip the handle **32** to manipulate the housing **12** with respect to a flat surface **36** to be painted.

A mechanism **38** is provided for applying the paint **18** from the chamber **14** of the housing **12** to the flat surface **36**. The mechanism **38** is within the recessed portion **24** and sized to extend somewhat partly outwardly from the front end **26** of the housing **12** for applying the paint **18** therefrom.

A structure **40** is provided for removably attaching the paint applying mechanism **38** within the recessed portion **24** of the housing **12** allowing the paint applying mechanism **38** to be disengaged from the housing **12** so that the paint **18** within the housing **12** and on the paint applying mechanism **38** can be cleaned therefrom after each use of the applicator **10**.

The paint applying mechanism **38** is a paint roller unit that includes a pair of spaced apart rollers **42** in which each of the rollers **42** has shaft ends **44** extending from opposite sides thereof. A pair of braces **46** are provided in which each of the braces **46** extends between one of the shaft ends **44** of each of the rollers **42** for holding the rollers apart and allowing the shaft ends **44** of the rollers to rotate thereabout. An endless belt **48** that has a plurality of suction cups **50** thereon extends around the rollers **42** so that the suction cups **50** can pick up the paint **18** and apply the paint onto the flat surface **36** when the housing is manually moved forward and backward. A guide roller **52** is spring biased, with a spring hinged arm **54**, onto the housing **12** at the front end **26** thereof to ride on the suction cups **50** for smoothing out the paint **18** after the suction cups **50** apply the paint into the flat surface **36**.

The removably attaching structure **40** includes the recessed portion **24** of the housing having a pair of parallel tracks **56**, each formed in an opposite side wall **58** thereof and the pair of braces **46** sized to act as a pair of guide members to slideably fit into the tracks **56** so that the paint roller unit can be manually pulled out and pushed into the recessed portion **24** of the housing.

The handle **32** has a threaded aperture **58** at other end **60** opposite the collar **20** of the housing **12** so that threaded end **62** of an extension pole **64**, shown in phantom in FIG. **1**, can engage with the threaded aperture **58** allowing the applicator **10** to reach remote areas of the flat surface **36** to be painted.

It will be understood that each of the elements described above, or two or more together, may also find a useful application in other types of methods differing from the type described above.

While certain novel features of this invention have been shown and described and are pointed out in the annexed claims, it is not intended to be limited to the details above, since it will be understood that various omissions, modifications, substitutions and changes in the forms and details of the device illustrated and in its operation can be made by those skilled in the art without departing in any way from the spirit of the present invention.

Without further analysis, the foregoing will so fully reveal the gist of the present invention that others can, by applying current knowledge, readily adapt it for various applications without omitting features that, from the standpoint of prior art, fairly constitute essential characteristics of the generic or specific aspects of this invention.

What is claimed as new and desired to be protected by Letters Patent is set forth in the appended claims:

1. A drip and splatter proof paint applicator which comprises:

(a) a housing having a hollow chamber, a filler neck on one side for receiving paint within the chamber, a collar positioned at a slight angle at rear end, and a recessed portion extending inwardly from front end into the chamber, the recessed portion having a plurality of holes extending across its width in various locations for allowing paint to exit from the chamber when said housing is placed in any position;

(b) a cap to attach to the filler neck of said housing for sealing the paint within the chamber;

(c) a handle attached at one end to the collar of said housing so that a person can grip said handle to manipulate said housing with respect to a flat surface to be painted;

(d) means for applying the paint from the chamber of said housing to the flat surface, said means being within the recessed portion and sized to extend somewhat partly outwardly from the front end of said housing for applying the paint therefrom, said paint applying means is a paint roller unit including a pair of spaced apart rollers each of which having shaft ends extending from opposite sides thereof, a pair of braces each of which extending between one of said shaft ends on said each of said pair of rollers for holding said pair of rollers apart and allowing said shaft ends of said pair of rollers to rotate thereabout, an endless belt extending around said pair of rollers and having a plurality of suction cups disposed thereon so that said suction cups pick up the paint and apply the paint directly to the flat surface when said housing is manually moved forward and backward without making a mess and thus eliminating the need for drop cloths, a guide roller spring biased onto said housing at the front end thereof to ride on said suction cups for smoothing out the paint after said suction cups apply the paint directly to the flat surface; and

(e) means for removably attaching said paint applying means within the recessed portion of said housing allowing said paint applying means to be disengaged from said housing so that the paint within said housing and on said paint applying means can be cleaned therefrom after each use of said applicator.

2. A drip and splatter proof paint applicator as recited in claim 1, wherein said removably attaching means includes:

(a) the recessed portion of said housing having a pair of parallel tracks, each formed in an opposite side wall thereof; and

(b) said pair of braces sized to act as a pair of guide members to slideably fit into the tracks so that said paint roller unit can be manually pulled out and pushed into the recessed portion of said housing.

3. A drip and splatter proof paint applicator as recited in claim 2, wherein said handle having a threaded aperture at other end opposite the collar of said housing so that threaded end of an extension pole can engage with the threaded aperture allowing said applicator to reach remote areas of the flat surface to be painted.

* * * * *