US005125197A

United States Patent [19]

Fuchs

[11] Patent Number: 5,125,197

[45] Date of Patent: Jun. 30, 1992

[54] INTERIOR COVER FOR AN AIR CONDITIONER MOUNTED IN A WALL

[76] Inventor: **Arthur E. Fuchs**, 33 Frankie La., North Babylon, N.Y. 11703-3701

[21] Appl. No.: **705,112**

[22] Filed: **May 21, 1991**

[51] **Int. Cl.**[5] **E06B 3/30**

[52] **U.S. Cl.** **52/202**; 52/511; 62/262; 312/100

[58] **Field of Search** 150/165; 62/262, 259.1; 312/100, 101; 160/238; 98/94.2; 52/511, 202, 208, 36, 403

[56] **References Cited**

U.S. PATENT DOCUMENTS

4,202,389	5/1980	Ewald	150/165
4,221,091	9/1980	Ganse et al.	52/202
4,325,229	4/1982	DeZurik	62/262
4,325,594	4/1982	Lane et al.	312/100
4,332,146	6/1982	Groebel et al.	98/94.2 X
4,376,082	3/1983	Heck	312/100 X
4,389,827	6/1983	Van Valkenburg	98/94.2 X
4,426,120	1/1984	Johnson et al.	312/100
4,625,784	12/1986	Boroson	150/165
4,759,194	7/1988	Shapiro	62/262
4,788,805	12/1988	Shaw	52/202

Primary Examiner—David A. Scherbel
Assistant Examiner—Robert Canfield
Attorney, Agent, or Firm—Michael I. Kroll

[57] **ABSTRACT**

An improved interior cover is provided for an air conditioner having a cabinet and front grille, the cabinet is mounted in an aperture in a wall of a building. The improved interior cover consists of an enclosure member sized to fit over the front grille and front portion of the cabinet of the air conditioner. A mechanism is for removably securing the enclosure member to the front grille/front portion of the cabinet of the air conditioner, while another mechanism is for thermally sealing the enclosure member to a front surface of the wall of the building about the aperture so as to prevent cold air and wind infiltration to enter the building through the aperture.

12 Claims, 2 Drawing Sheets

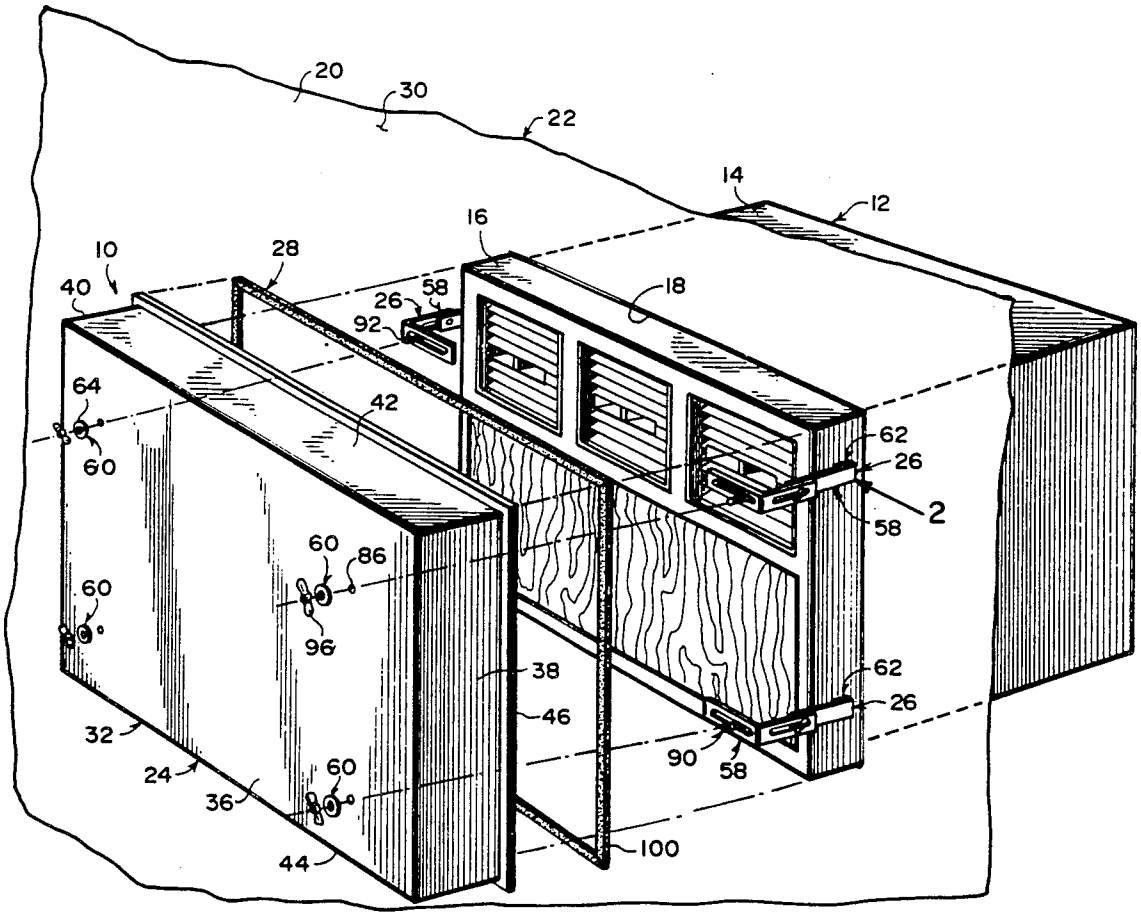

Fig. 1

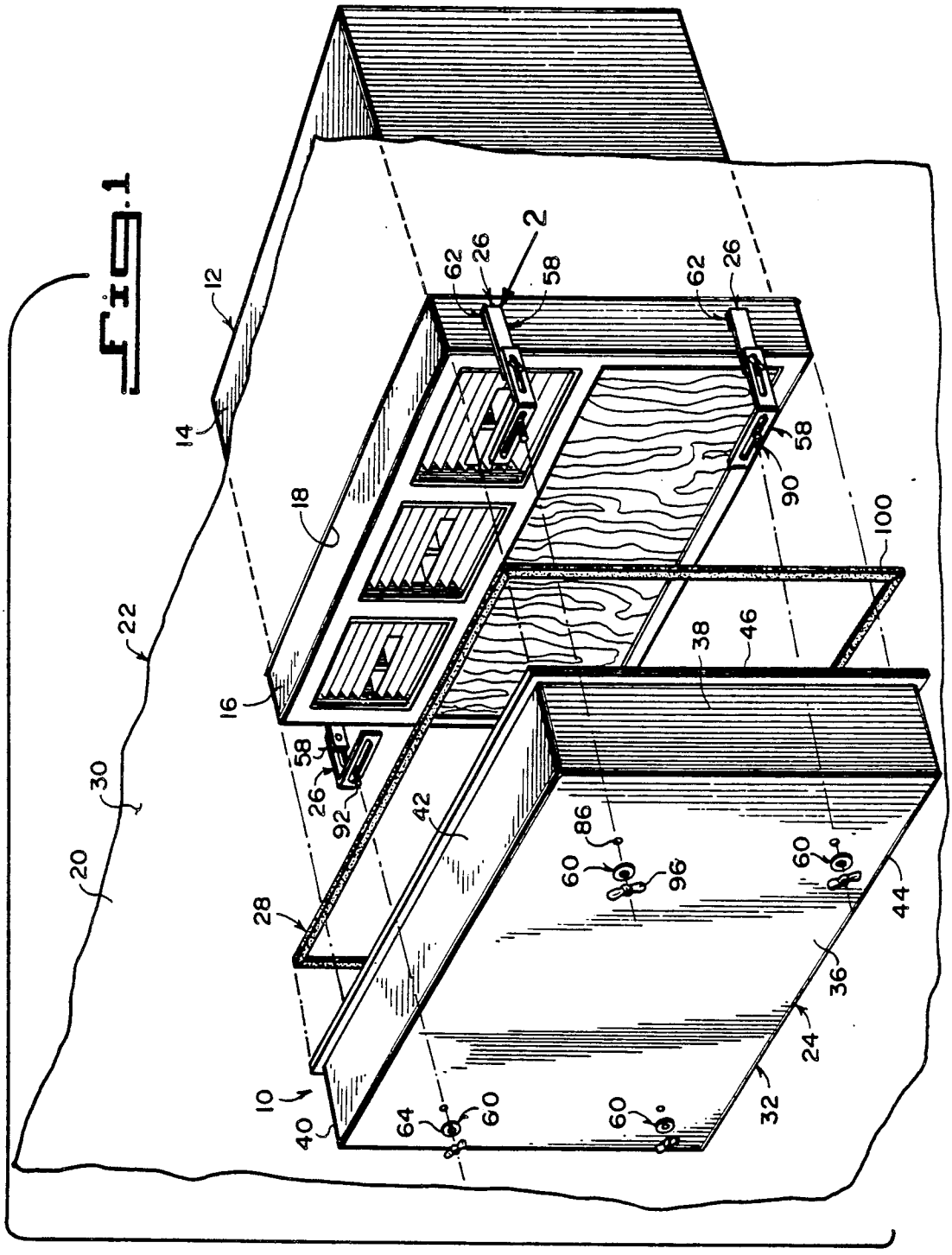
2
12
14
16
18
20
22
24
26
28
30
32
36
38
40
42
44
46
58
60
62
64
86
90
92
96
100
10

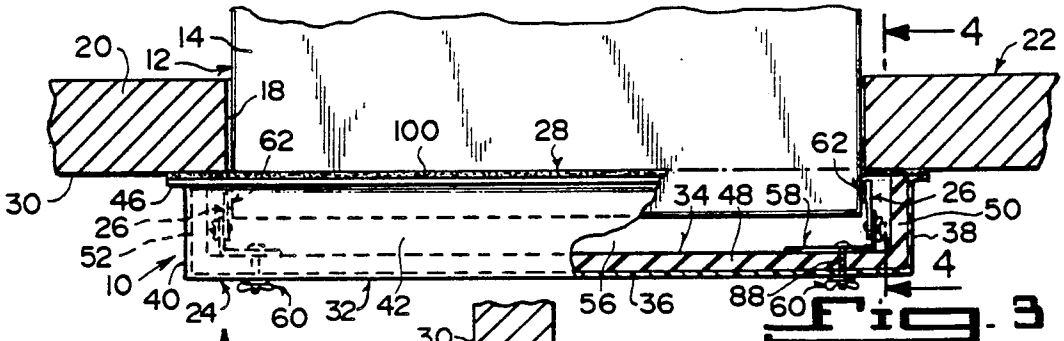

Fig. 3

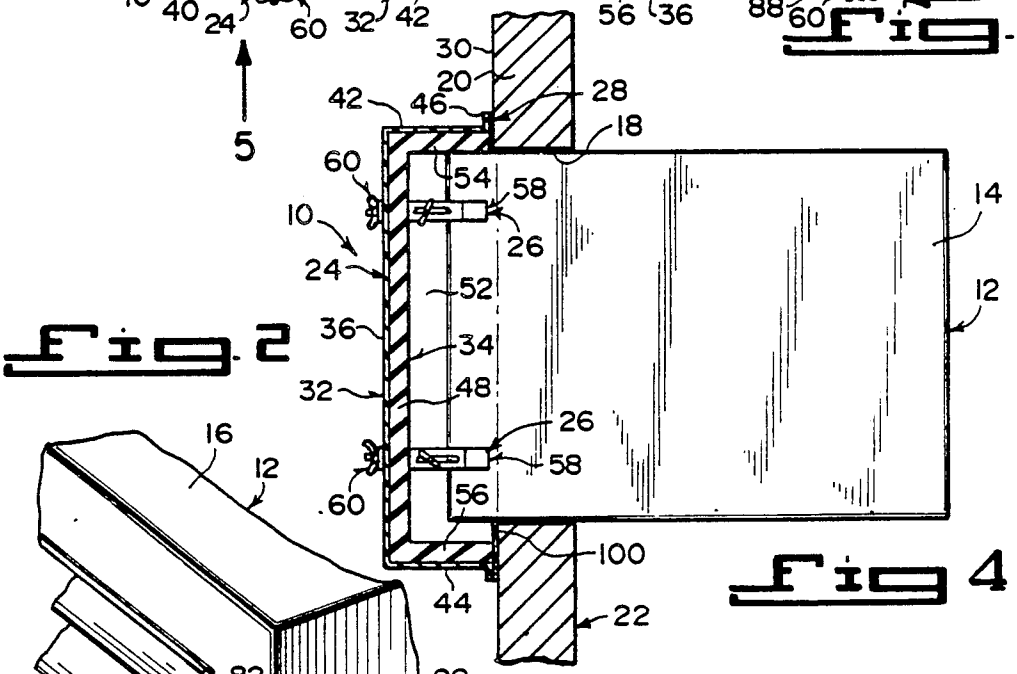

Fig. 2

Fig 4

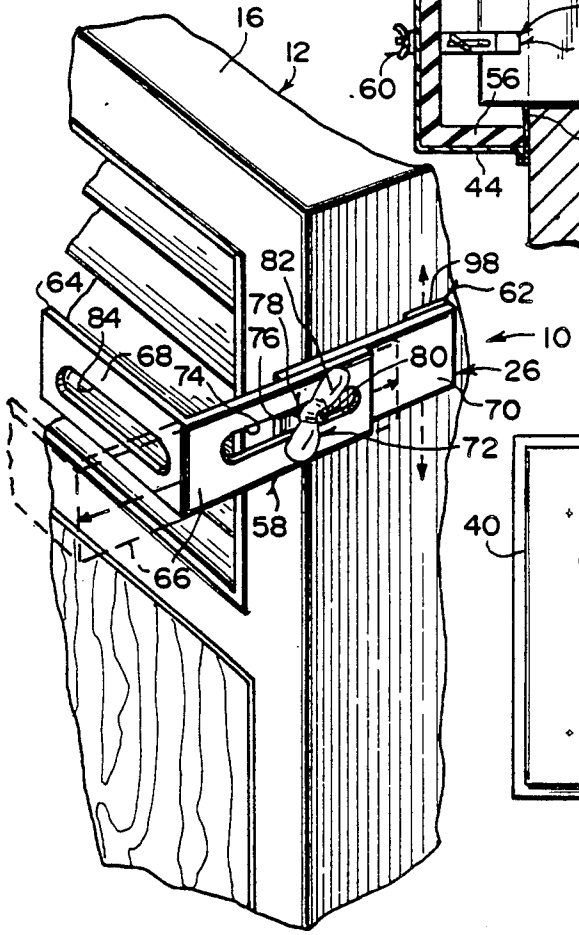

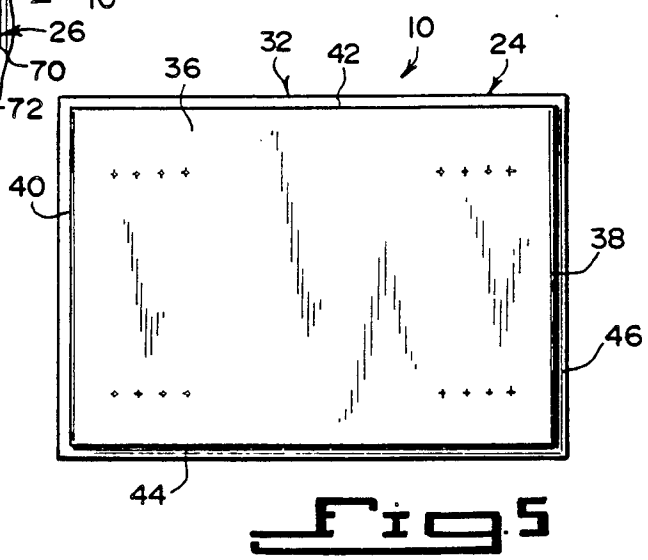

Fig 5

INTERIOR COVER FOR AN AIR CONDITIONER MOUNTED IN A WALL

BACKGROUND OF THE INVENTION

1. Field of the Invention

The instant invention relates generally to insulating devices and more specifically it relates to an improved interior cover for an air conditioner mounted in a wall.

2. Description of the Prior Art

Each year, at the end of the summer season, an owner of a wall mounted air conditioner is faced with the need to seal the air conditioner from winter weather conditions. This is usually done by wrapping the exterior of the cabinet of the air conditioner with a plastic sheet or by covering it with a commercially available plastic cover, open at the bottom, on the rear of the air conditioner cabinet. Neither method stops the infiltration of the cold air because insulation is not present. If the air conditioner is installed on any floor higher than the first floor, the covering operation involves a person hanging off an extension ladder and risking injury from a possible fall.

Numerous insulating devices have been provided in prior art that are adapted to conserve energy by enclosing openings, such as for doors, windows, air conditioners or the like in building structure. While these units may be suitable for the particular purpose to which they address, they would not be as suitable for the purposes of the present invention as heretofore described.

SUMMARY OF THE INVENTION

A primary object of the present invention is to provide an improved interior cover for an air conditioner mounted in a wall that will overcome the shortcomings of the prior art devices.

Another object is to provide an improved interior cover for an air conditioner mounted in a wall that is installed over the air conditioner from the inside of a building and will insulate the aperture within the wall for the air conditioner by employing a weather stripping seal thereabout.

An additional object is to provide an improved interior cover for an air conditioner mounted in a wall in which installation of the cover requires adjustment of the magnetic attachment brackets, whereby the enclosure can be pressed into positioned about the front of the air conditioner cabinet, sealing the aperture to prevent cold air and wind infiltration into the building.

A further object is to provide an improved interior cover for an air conditioner mounted in a wall that is simple and easy to use.

A still further object is to provide an improved interior cover for an air conditioner mounted in a wall that is economical in cost to manufacture.

Further objects of the invention will appear as the description proceeds.

To the accomplishment of the above and related objects, this invention may be embodied in the form illustrated in the accompanying drawings, attention being called to the fact, however, that the drawings are illustrative only, and that changes may be made in the specific construction illustrated and described within the scope of the appended claims.

BRIEF DESCRIPTION OF THE DRAWING FIGURES

FIG. **1** is an exploded perspective view of the instant invention ready to be installed on the front of an air conditioner in a wall.

FIG. **2** is an enlarged perspective detail view of one of the adjustable attachment brackets as indicated by arrow **2** in FIG. **1**.

FIG. **3** is a top view with parts broken away and in section showing the instant invention installed.

FIG. **4** is a side cross sectional view taken along line **4—4** in FIG. **3**.

FIG. **5** is a front view of just the enclosure member taken in direction of arrow **5** in FIG. **3**.

DETAILED DESCRIPTION OF THE PREFERRED EMBODIMENTS

Turning now descriptively to the drawings, in which similar reference characters denote similar elements throughout the several views, the Figures illustrate an improved interior cover **10** for an air conditioner **12** having a cabinet **14** and a front grille **16**. The cabinet **14** is mounted in an aperture **18** in a wall **20** of a building **22**. The improved interior cover **10** consists of an enclosure member **24** sized to fit over the front grille **16** and the front portion of the cabinet **14** of the air conditioner **12**. A mechanism **26** is for removably securing the enclosure member **24** to the front grille **16**/front portion of the cabinet **14** of the air conditioner **12**. Another mechanism **28** is for thermally sealing the enclosure member **24** to a front surface **30** of the wall **20** of the building **22** about the aperture **18** so as to prevent cold air and wind infiltration to enter the building **22** through the aperture **18**.

The enclosure member **24** includes an outer thin rigid protection shell **32** and an inner tick rigid insulation shell **34** affixed to outer shell **22**. The outer shell **32** is fabricated out of a molded plastic material and includes a front panel **36** larger in size than the aperture **18** in the wall **20** of the building **22**. A right wall **38** is formed integrally with and extends inwardly from the right side of the front panel **36**. A left wall **40** is formed integrally with and extends inwardly from the left side of the front panel **36**. A top wall **42** is formed integrally with and extends inwardly from the top side of the front panel **36**. A bottom wall **44** is formed integrally with and extends inwardly from the bottom side of the front panel **36**. Flange **46** is formed integrally with and extends outwardly from the right wall **38**, the left wall **40**, the top wall **42** and the bottom wall **44** in a plane substantially parallel to the front panel **36**.

The inner shell **34** is fabricated out of a styrofoam material and includes a front plate **48**. A right partition **50** is formed integrally with and extends inwardly from the right side of the front panel **48**. A left partition **52** is formed integrally with and extends inwardly form the left side of the front plate **48**. A top partition **54** is formed integrally with and extends inwardly from the top side of the front plate **48**. A bottom partition **56** is formed integrally with and extends inwardly from the bottom side of the front plate **48**.

The removably securing mechanism **26** includes a plurality of adjustable brackets **58**. A mechanism **60** is for mounting one end of each of the adjustable brackets **58** to the enclosure member **24** proximate the right and left sides thereof. Another mechanism **62** is for removably attaching an opposite end of each of the adjustable

brackets **58** to the side of the front grille **16**/front portion of the cabinet **14** of the air conditioner **12**.

Each adjustable bracket **58** includes an L-shaped member **64** having a first arm **66** and a second arm **68**, a straight member **70** and a mechanism **72** for adjustably affixing the straight member **70** to the first arm **66** of the L-shaped member **64**.

The adjustably affixing mechanism **72** includes the first arm **66** of said L-shaped member having a first elongated slot **74** therein, the straight member **70** has a hole **76** extending through a first end thereof. A bolt **78** has a threaded shank **80** which extends through the hole **76** in the straight member **70** and through the first elongated slot **74** in the first arm **66** of the L-shaped member **64**. A wing nut **82** is threadable onto a distal end of the threaded shank **80** of the bolt **78** so that the straight member **70** can be adjustably positioned and retained to the first arm **66** of the L-shaped member **64** of the adjustable bracket **58**.

The mounting mechanism **60** includes the second arm **68** of the L-shaped member **64** having a second elongated slot **84** therein. The front panel **36** of the outer shell **32** has a hole **86** extending therethrough. The front plate **48** of the inner shell **34** has a hole **88** extending therethrough in alignment with the hole **86** in the front panel **36**. A bolt **90** has a threaded shank **92** which extends through the second elongated slot **84** in the second arm **68** of the L-shaped member **64** of the adjustable bracket **58**, through the hole **88** in the front plate **48** of the inner shell **34** and through the hole **86** in the front panel **36** of the outer shell **32** of the enclosure member **24**. A washer **94** fits over a distal end of the threaded shank **92** of the bolt **90**. A wing nut **96** is threadable onto the distal end of the threaded shank **92** of the bolt **90** so that the second arm **68** of the L-shaped member **64** can be adjustably positioned and retained to the enclosure member **24**.

The removably attaching mechanism **62** includes a magnet **98** connected to the inner side of a second end of the straight member **70** of the adjustable bracket **58**. The magnet **98** can be attached to the side of the front grille **16**/front portion of the cabinet **14** of the air conditioner **12** if the front grille **16** and the cabinet **14** of the air conditioner **12** are fabricated out of magnetic material.

The L-shaped member **64** and the straight member **70** of each adjustable bracket **58** is fabricated out of a non-magnetic material, such as plastic and the like.

The thermally sealing mechanism **28** is a strip of resilient, compressible weather stripping material **100** secured to the inner surface of e flange **46** around the entire periphery of the flange **46** so as to bear against the front surface **30** of the wall **20** of the building **22**.

LIST OF REFERENCE NUMBERS

10: improved interior cover
12: air conditioner
14: cabinet
16: front grille
18: aperture
20: wall
22: building
24: enclosure member
26: removably securing mechanism
28: thermally sealing mechanism
30: front surface **30** of **20**
32: outer thin rigid protection shell
34: inner thick rigid insulation shell
36: front panel of **32**
38: right wall of **32**
40: left wall of **32**
42: top wall of **32**
44: bottom wall of **32**
46: flange of **32**
48: front plate of **34**
50: right partition of **34**
52: left partition of **34**
54: top partition of **34**
56: bottom partition of **34**
58: adjustable bracket
60: mounting mechanism
62: removably attaching mechanism
64: L-shaped member of **58**
66: first arm of **64**
68: second arm of **64**
70: straight member of **58**
72: adjustably affixing mechanism
74: first elongated slot
76: hole in **70**
78: bolt
80: threaded shank of **78**
82: wing nut
84: second elongated slot in **68**
86: hole in **36**
88: hole in **48**
90: bolt
92: threaded shank of **90**
94: washer
96: wing nut
98: magnet
100: strip of weather stripping material

It will be understood that each of the elements described above, or two or more together may also find a useful application in other types of methods differing from the type described above.

While certain novel features of this invention have been shown and described and are pointed out in the annexed claims, it is not intended to be limited to the details above, since it will be understood that various omissions, modifications, substitutions and changes in the forms and details of the device illustrated and in its operation can be made by those skilled in the art without departing in any way from the spirit of the present invention.

Without further analysis, the foregoing will so fully reveal the gist of the present invention that others can, by applying current knowledge, readily adapt it for various applicatcns without omitting features that, from the standpoint of prior art, fairly constitute essential characteristics of the generic or specific aspects of this invention.

What is claimed is new and desired to be protected by Letters Patent is set forth in the appended claims:

1. An improved interior cover for an air conditioner having a cabinet and front grille, the cabinet being mounted in an aperture in a wall of a building, said improved interior cover comprising:

a) an enclosure member sized to fit over the front grille and a front portion of the cabinet of the air conditioner;

b) means for removably securing said enclosure member to the front grille and the front portion of the cabinet of the air conditioner; and

c) enclosure member to the wall of the building about the aperture so as to prevent cold air and wind infiltration to enter the building through the aperture; wherein said means for removably securing

said enclosure member includes: d) a plurality of adjustable brackets; e) means for mounting one end of each of said adjustable brackets to said enclosure member proximate the right and left sides thereof; and f) means for removably attaching an opposite end of each of said adjustable brackets to the side of the front of the grille and to the front portion of the cabinet of the air conditioner.

2. An improved interior cover as recited in claim 1, wherein said enclosure member includes:

a) an outer thin rigid protection shell; and

b) an inner tick rigid insulation shell affixed to said outer shell.

3. An improved interior cover as recited in claim 2, wherein said outer shell is fabricated out of a molded plastic material.

4. An improved interior cover as recited in claim 3, wherein said outer shell further includes:

a) a front panel larger in size than the aperture in the wall of the building;

b) a right wall, a left wall, a top wall and a bottom wall all formed integrally with and extending from the front panel towards said wall of a building; c) a flange formed integrally with and extending outwardly from said right, left, top, and bottom walls in a plane substantially parallel to said front panel.

c) a left wall formed integrally with and extending inwardly from the left side of said front panel;

d) a flange formed integrally with and extending outwardly from said right wall, said left wall, said top wall and said bottom wall in a plane substantially parallel to said front panel.

5. An improved interior cover as recited in claim 4, wherein said inner shell is fabricated out of a styrofoam material.

6. An improved interior cover as recited in claim 5, wherein said inner shell further includes:

a) a front plate;

b) a right partition formed integrally with and extending inwardly from the right side of said front plate;

c) a left partition formed integrally with and extending inwardly from the left side of said front plate;

d) a top partition formed integrally with and extending inwardly from the top side of said front plate; and

e) a bottom partition formed integrally with and extending inwardly from the bottom side of said front plate.

7. An improved interior cover as recited in claim 1, wherein each said adjustable bracket includes:

a) an L-shaped member having a first arm and a second arm;

b) a straight member; and

c) means for adjustably affixing said straight member to said first arm of said L-shaped member.

8. An improved interior cover as recited in claim 7, wherein said adjustably affixing means includes:

a) the first arm of said L-shaped member having a first elongated slot therein;

b) said straight member having a hole extending through a first end thereof;

c) a bolt having a threaded shank which extends through the hole in said straight member and through the first elongated slot in the first arm of said L-shaped member; and

d) a wing nut threadable onto a distal end of the threaded shank of said bolt so that said straight member can be adjustably positioned and retained to the first arm of said L-shaped member of said adjustable bracket.

9. An improved interior cover as recited in claim 8, wherein said means for mounting includes:

a) the second arm of said L-shaped member having a second elongated slot therein;

b) said front panel of said outer shell having a hole extending therethrough;

c) said front plate of said inner shell having a hole extending therethrough in alignment with the hole in said front panel;

d) a bolt having a threaded shank which extends through the second elongated slot in the second arm of said L-shaped member of said adjustable bracket, through the hole in said front plate of said inner shell and through the hole in said front panel of said outer shell of said enclosure member;

e) a washer to fit over a distal end of the threaded shank of said bolt; and

f) a wing nut threadable onto the distal end of the threaded shank of said bolt so that the second arm of said L-shaped member can be adjustably positioned and retained to said enclosure member.

10. An improved interior cover as recited in claim 9, wherein said means for removably attaching includes a magnet connected to the inner side of a second end of said straight member of said adjustable bracket so that said magnet can be attached to the side of the front grille/front portion of the cabinet of the air conditioner if the front grille and the cabinet of the air conditioner are fabricated out of magnetic material.

11. An improved interior cover as recited in claim 10, wherein said L-shaped member and said straight member of each said adjustable bracket is fabricated out of a non-magnetic material, such as plastic or the like.

12. An improved interior cover as recited in claim 11, wherein said thermally sealing means is a strip of resilient, compressible weather stripping material secured to an inner surface of said flange around the entire periphery of said flange so as to bear against a front surface of the wall of the building.

* * * * *