US005249991A

United States Patent [19]

Schinkel

[11] Patent Number: 5,249,991

[45] Date of Patent: Oct. 5, 1993

[54] MANUALLY OPERATED PROPULSION DEVICE FOR A CANOE

[76] Inventor: William J. Schinkel, P.O. Box 723, Fredric, Wis. 54837

[21] Appl. No.: 956,333

[22] Filed: Oct. 5, 1992

[51] Int. Cl.[5] B63H 16/20

[52] U.S. Cl. 440/27

[58] Field of Search 440/21, 24–31, 440/90, 91, 104, 105; 114/347

[56] References Cited

U.S. PATENT DOCUMENTS

1,024,419	4/1912	Resch	440/31
1,532,990	4/1925	Csengery	440/27

Primary Examiner—Jesus D. Sotelo

Attorney, Agent, or Firm—Michael I. Kroll

[57] ABSTRACT

A manually operated propulsion device is provided for a canoe having a hull with a pair of gunwales, a seat extending directly under the gunwales for a person to operate the device and a thwart spaced away from the seat, extending directly under the gunwales. The device is two propelling mechanisms, in which each propelling mechanism consists of a structure for rotatively securing a drive shaft between the seat and the thwart of the canoe, so that the drive shaft will extend transversely over one of the gunwales of the canoe. A paddle assembly is transversely connected to an outer end of the drive shaft. An apparatus is for manually rotating an inner end of the drive shaft by the person sitting on the seat in the canoe, so that the paddle assembly will contact water thereabout to propel and steer the canoe through the water.

14 Claims, 2 Drawing Sheets

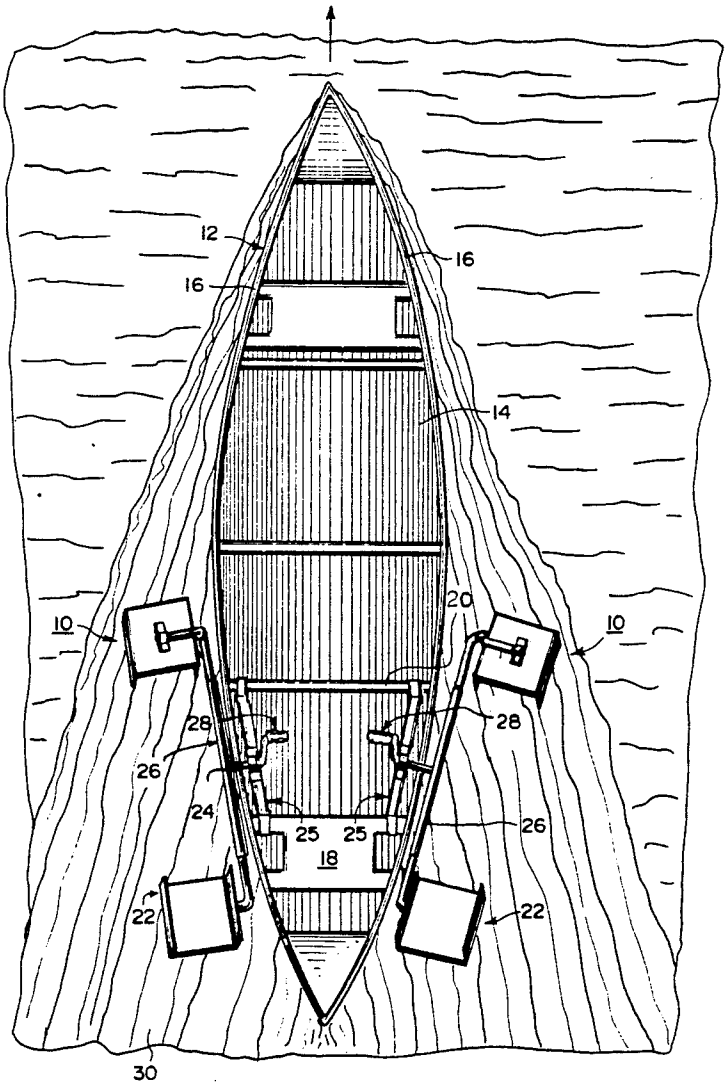

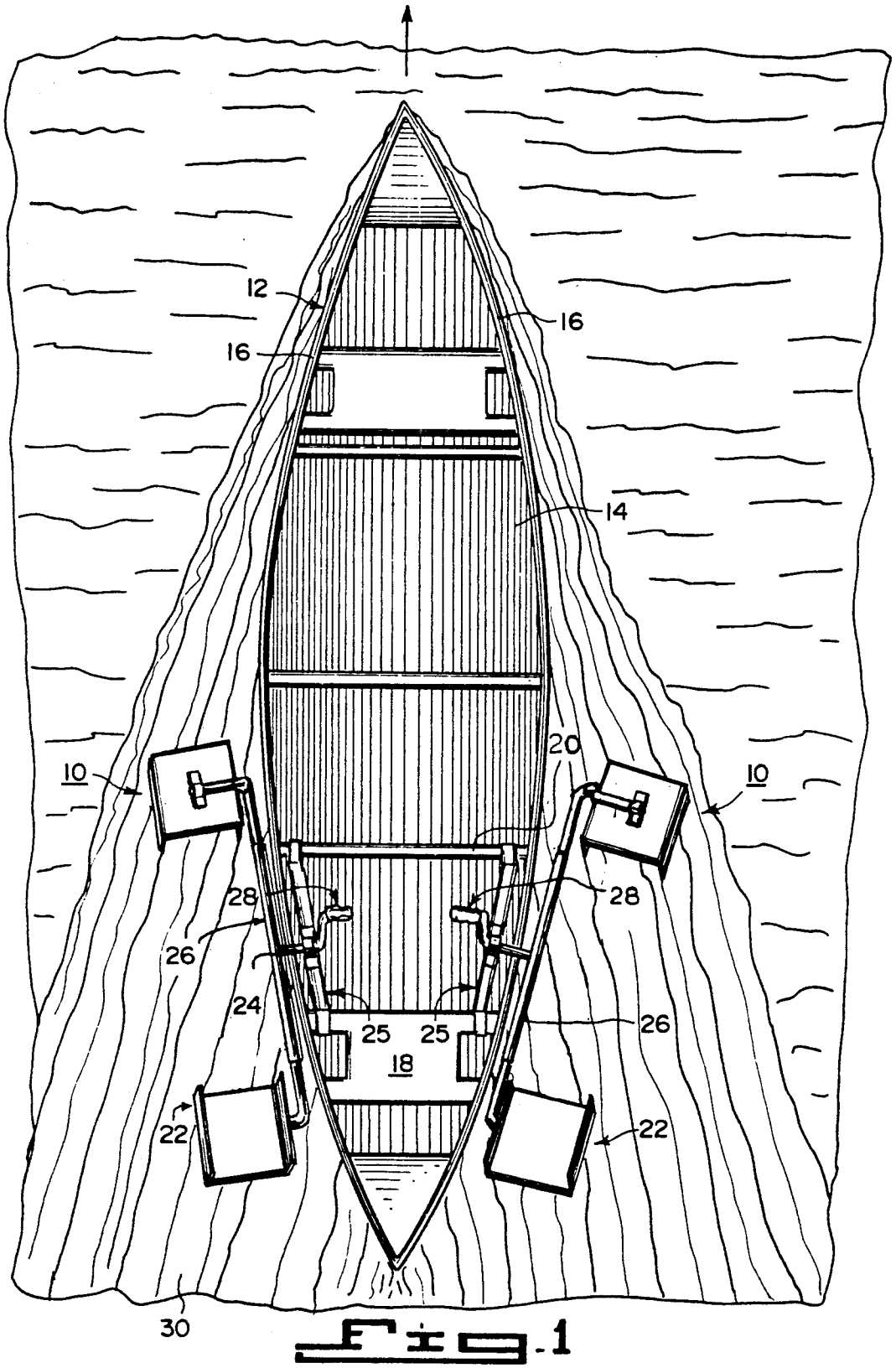

Fig. 1

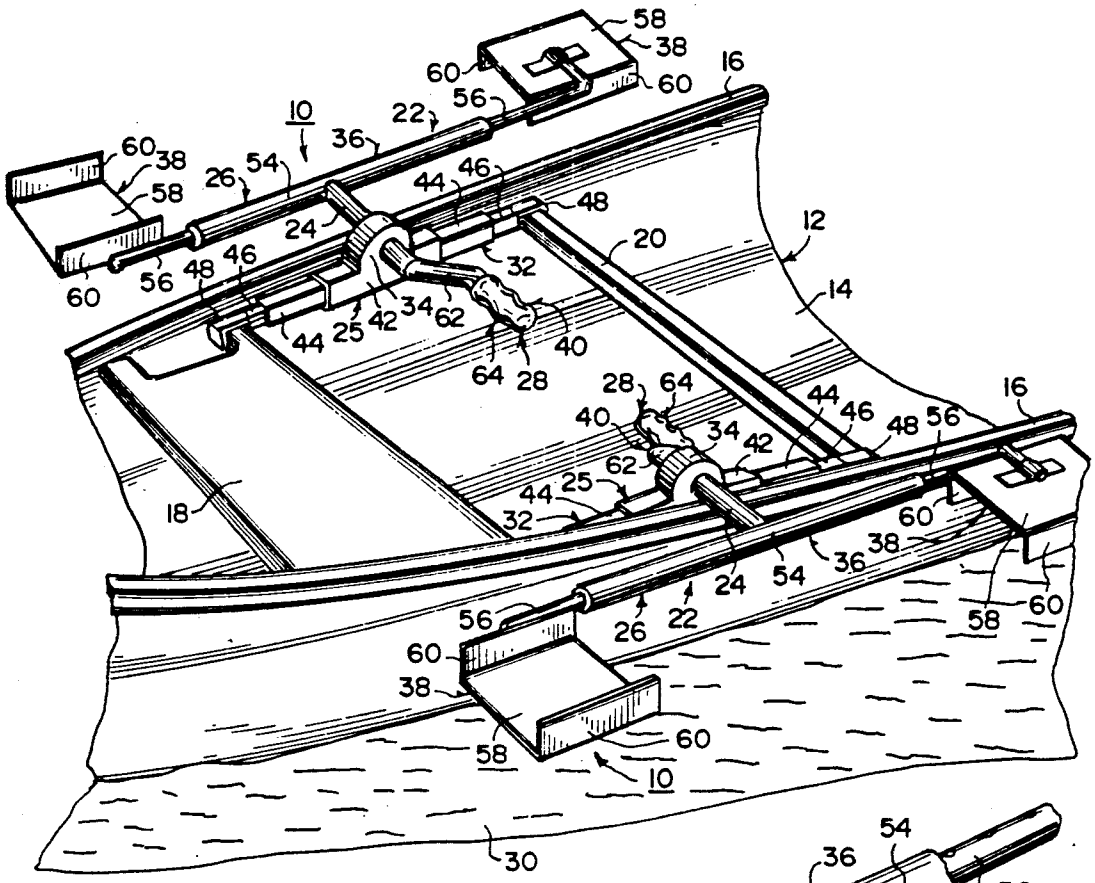
58
38
60
60
16
56
22
10
36
60
38
58
26
54
44
46
48
24
12
20
32
60
56
48
46
14
44
25
42
34
62
40
64
28
28
64
16
40
44
46
48
56
34
42
62
25
44
18
32
60
38
36
24
54
56
26
22
58
60
60
38
58
60
10
30

Fig. 2

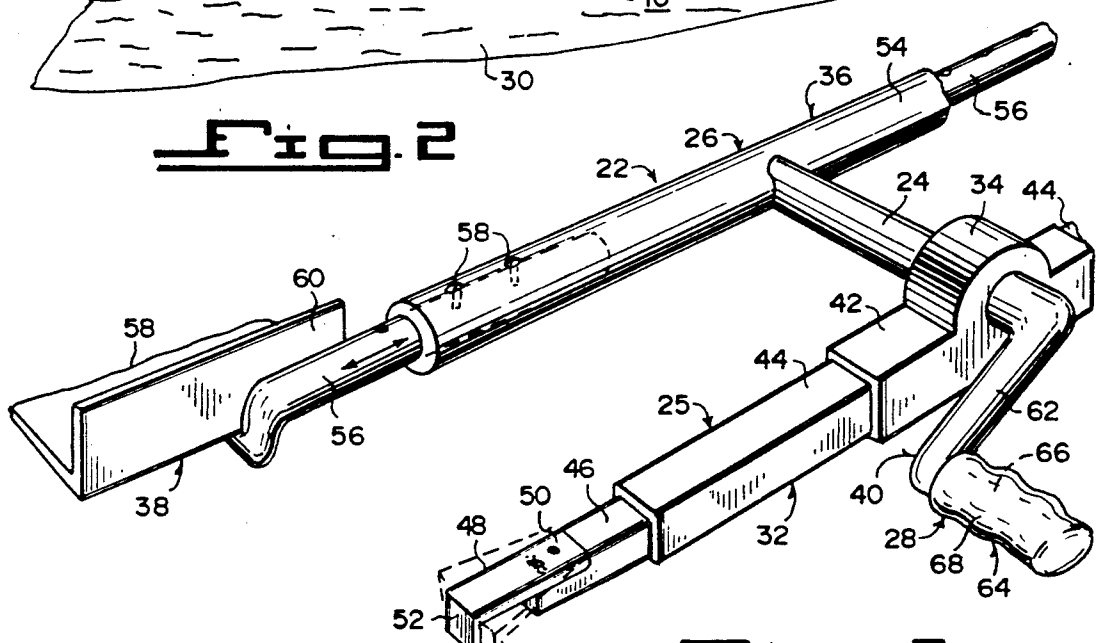
54
36
56
26
22
24
34
44
58
60
58
42
44
25
62
56
66
46
40
50
48
32
28
68
64
52
38

Fig. 3

MANUALLY OPERATED PROPULSION DEVICE FOR A CANOE

BACKGROUND OF THE INVENTION

1. Field of the Invention

The instant invention relates generally to boats and more specifically it relates to a manually operated propulsion device for a canoe.

2. Description of the Prior Art

Numerous boats have been provided in prior art that are adapted to contain various types of mechanisms which propel the boats through bodies of water. For example, U.S. Pat. Nos. 1,024,419 to Resch; 1,495,002 to Delgado; 1,527,571 to Morrison; 1,532,990 to Csengery; 2,505,721 to Peter et al; 2,578,535 to Graci; 3,779,202 to Martin et al and 4,979,916 to LeBlanc all are illustrative of such prior art. While these units may be suitable for the particular purpose to which they address, they would not be as suitable for the purposes of the present invention as heretofore described.

SUMMARY OF THE INVENTION

A primary object of the present invention is to provide a manually operated propulsion device for a canoe that will overcome the shortcomings of the prior art devices.

Another object is to provide a manually operated propulsion device for a canoe that can be propelled and steered by one person efficiently, without strain and effort by the person.

An additional object is to provide a manually operated propulsion device for a canoe in which the paddle assemblies can be adjusted, so that the depth of submergence of the paddles may be regulated for the need of the person using the canoe.

A further object is to provide a manually operated propulsion device for a canoe that is simple and easy to use.

A still further object is to provide a manually operated propulsion device for a canoe that is economical in cost to manufacture.

Further objects of the invention will appear as the description proceeds.

To the accomplishment of the above and related objects, this invention may be embodied in the form illustrated in the accompanying drawings, attention being called to the fact, however, that the drawings are illustrative only, and that changes may be made in the specific construction illustrated and described within the scope of the appended claims.

BRIEF DESCRIPTION OF THE DRAWING FIGURES

FIG. **1** is a top plan view of a canoe with the instant invention installed therein.

FIG. **2** is a perspective view of a portion of the canoe showing the instant invention in greater detail.

FIG. **3** is an enlarged perspective view with parts broken away of one of the propelling mechanism of the instant invention.

DETAILED DESCRIPTION OF THE PREFERRED EMBODIMENTS

Turning now descriptively to the drawings, in which similar reference characters denote similar elements throughout the several views, the Figures illustrate a manually operated propulsion device **10** for a canoe **12** having a hull **14** with a pair of gunwales **16**, a seat **18** extending directly under the gunwales **16** for a person to operate the device **10** and a thwart **20** spaced away from the seat **18**, extending directly under the gunwales **16**. The device **10** is two propelling mechanism **22** in which each propelling mechanism **22** comprises a drive shaft **24**, with a structure **25** for rotatively securing the drive shaft **24** between the seat **18** and the thwart **20** of the canoe **12**, so that the drive shaft **24** will extend transversely over one of the gunwales **16** of the canoe **12**.

A paddle assembly **26** is transversely connected to an outer end of the drive shaft **24**. An apparatus **28** is for manually rotating an inner end of the drive shaft **24** by the person sitting on the seat **18** in the canoe **12**. The paddle assembly **26** will contact water **30** thereabout to propel and steer the canoe **12** through the water **30**.

The rotatively securing structure **25** includes a bracket **32** to transversely extend and engage with the seat **18** and the thwart **20** adjacent the gunwale **16** of the canoe **12**. A drive shaft **34** is bearing on the bracket **32** to receive the drive shaft **24**, so that the drive shaft **24** can rotate within the drive shaft bearing **34**.

The paddle assembly **26** consists of an arm **36** transversely connected to the outer end of the drive shaft **24**. A pair of blades **38**, are provided with each located at an opposite end of the arm **36**. The manually rotating apparatus **28** is a crank assembly **40** connected to the inner end of the drive shaft **24** in the bearing **34** on the bracket **32**.

The bracket **32** is adjustable and includes a central tube **42** in which the drive shaft bearing **34** is transversely formed onto. A pair of main tubes **44** are provided, in which each main tube **44** extends out from one end of the central tube **42**. A pair of sliding tubes **46** are provided, in which each sliding tube **46** fits into and adjustably extends out from one end of one main tube **44**. A pair of L-shaped connector clamps **48** are also provided in which each long leg **50** of each connector clamp **48** is attached to a distal end of each sliding tube **46**. Each short leg **52** of the connector clamps **48** will engage with the seat **18** and the thwart **20** of the canoe **12**.

The arm **36** is adjustable and consists of a main hollow rod **54** transversely connected to the outer end of the drive shaft **24**. A pair of extension rods **56** are provided, in which each extension rod **56** is connected at a first end to one of the blades **38**, while a second end fits into and extends out from one end of the main hollow rod **54**. A plurality of fasteners **58** are for securing the second end of each extension rod **56** to the main hollow rod **54** in a stationary position.

Each blade **38** is fabricated out of a thin flat plate **58** bent at a right angle at each opposite side **60**, to form a generally U-shaped configuration. The plates **58** are each connected to the first end of each extension rod **56**, so that the bent sides **60** will face in the same direction to contact the water **30**.

The crank arm **62** is connected at a first end to the inner end of the drive shaft **24**. A handle unit **64** extends at a right angle from a second end of the crank arm **62**, which can be manually rotated by the person sitting on the seat **18** in the canoe **12**, so as to turn the drive shaft **24**. The handle unit **64** consists of a shank **66** pivotally connected to the second end of the crank arm **62**. A hand grip **68** fits over the shank **66**, so that a hand of the person can hold onto the hand grip **68** to operate the crank arm **62**.

The central tube **42**, the main tubes **44** and the sliding tubes **46** of the bracket **32**, are all square in cross section. The main hollow rod **54** and the extension rod **56** of the arm **36** are circular in cross section. The drive shaft **24**, the bracket **32**, the drive shaft bearing **34**, the paddle assembly **36** and the crank assembly **40**, are all fabricated out of a durable non-corrosive material. Typically, but not limited to, stainless steel, plastic, wood and similar articles.

To use the manually operated propulsion device **10** a person attaches each propelling mechanism **22** to the canoe **12** as state above. The person can now sit upon the seat **18** and operate the propelling mechanism **22** together with each hand to propel the cane **12** through the water **30**. If the person wants to turn the canoe **12** either to the left or the right, one of the propelling mechanisms **22** will be operated, while the other is kept inoperative, so as to steer the canoe **12**.

LIST OF REFERENCE NUMBERS

10 manually operated propulsion device
12 canoe
14 hull of **12**
16 gunwale of **12**
18 seat in **12**
20 thwart in **12**
22 propelling mechanism
24 drive shaft
25 rotatively securing structure
26 paddle assembly
28 manually rotating apparatus
30 water
32 bracket of **25**
34 drive shaft bearing of **25**
36 arm of **26**
38 blade of **26**
40 crank assembly for **28**
42 central tube of **32**
44 main tube of **32**
46 sliding tube of **32**
48 L-shaped connector clamp of **32**
50 long leg of **48**
52 short leg of **48**
54 main hollow rod of **36**
56 extension rod of **36**
58 thin flat plate for **38**
60 bent side of **58**
62 crank arm of **40**
64 handle unit of **40**
66 shank of **64**
68 hand grip of **64**

It will be understood that each of the elements described above, or two or more together may also find a useful application in other types of methods differing from the type described above.

While certain novel features of this invention have been shown and described and are pointed out in the annexed claims, it is not intended to be limited to the details above, since it will be understood that various omissions, modifications, substitutions and changes in the forms and details of the device illustrated and in its operation can be made by those skilled in the art without departing in any way from the spirit of the present invention.

Without further analysis, the foregoing will so fully reveal the gist of the present invention that others can, by applying current knowledge, readily adapt it for various applications without omitting features that, from the standpoint of prior art, fairly constitute essential characteristics of the generic or specific aspects of this invention.

What is claimed is new and desired to be protected by Letters Patent is set forth in the appended claims:

1. A manually operated propulsion device for a canoe having a hull with a pair of gunwales, a seat extending directly under the gunwales for a person to operate said device and a thwart spaced away from the seat, extending directly under the gunwales, said device being two propelling mechanisms in which each of said propelling mechanism comprises:

a) a drive shaft;

b) means for rotatively securing said drive shaft between the seat and the thwart of the canoe, so that said drive shaft will extend transversely over one of the gunwales of the canoe; said securing means including a bracket to transversely extend and engage with the seat and the thwart adjacent the gunwale of the canoe; and a drive shaft bearing on said bracket to receive said drive shaft, so that said drive shaft can rotate within said drive shaft bearing;

c) a paddle assembly transversely connected to an outer end of said drive shaft; and

d) means for manually rotating an inner end of said drive shaft by the person sitting on the seat in the canoe, so that said paddle assembly will contact water thereabout to propel and steer the canoe through the water.

2. A manually operated propulsion device for a canoe, as recited in claim **1**, wherein said paddle assembly includes:

a) an arm transversely connected to the outer end of said drive shaft; and

b) a pair of blades, each located at an opposite end of said arm.

3. A manually operated propulsion device for a canoe, as recited in claim **2**, wherein said manually rotating means is a crank assembly connected to the inner end of said drive shaft in said bearing on said bracket.

4. A manually operated propulsion device for a canoe, as recited in claim **2**, wherein said bracket is adjustable and includes:

a) a central tube in which said drive shaft bearing is transversely formed onto;

b) a pair of main tubes, in which each said main tube extends out from one end of said central tube;

c) a pair of sliding tubes, in which each said sliding tube fits into and adjustable extends out from one end of one said main tube; and

d) a pair of L-shaped connector clamps in which each long leg of each said connector clamp is attached to a distal end of each said sliding tube, so that each short leg of said connector clamps will engage with the seat and the thwart of the canoe.

5. A manually operated propulsion device for a canoe, as recited in claim **4**, wherein said bracket is adjustable and includes:

a) a main hollow rod transversely connected to the outer end of said drive shaft;

b) a pair of extension rods in which each said extension rod is connected at a first end to one of said blades, while a second end fits into and extends out from one end of said main hollow rod; and

c) a plurality of fasteners for securing the second end of each said extension rod to said main hollow rod in a stationary position.

6. A manually operated propulsion device for a canoe, as recited in claim 5, wherein each said blade is fabricated out of a thin flat plate bent at a right angle at each opposite side to form a generally U-shaped configuration, whereby said plates are each connected to the first end of each said extension rod, so that the bent sides will face in the same direction to contact the water.

7. A manually operated propulsion device for a canoe, as recited in claim 6, wherein said crank assembly includes:

a) a crank arm connected at first end to the inner end of said drive shaft; and

b) a handle unit extending at a right angle from a second end of said crank arm, which can be manually rotated by the person sitting on the seat in the canoe, so as to turn said drive shaft.

8. A manually operated propulsion device for a canoe, as recited in claim 7, wherein said handle unit includes:

a) a shank pivotally connected to the second end of said crank arm; and

b) a hand grip to fit over said shank, so that a hand of the person can hold onto said hand grip to operate said crank arm.

9. A manually operated propulsion device for a canoe, as recited in claim 8, wherein said central tube, said main tubes and said sliding tubes of said bracket are all square in cross section.

10. A manually operated propulsion device for a canoe, as recited in claim 9, wherein said main hollow rod and said extension rods of said arm are circular in cross section.

11. A manually operated propulsion device for a canoe as recited in claim 10, wherein said drive shaft is fabricated out of a durable non-corrosive material.

12. A manually operated propulsion device for a canoe as recited in claim 11, wherein said bracket and said drive shaft bearing are fabricated out of a durable non-corrosive material.

13. A manually operated propulsion device for a canoe as recited in claim 12, wherein said paddle assembly is fabricated out of a durable non-corrosive material.

14. A manually operated propulsion device for a canoe as recited in claim 13, wherein said crank assembly is fabricated out of a durable non-corrosive material.

* * * * *