US005899835A

United States Patent [19]

Puranda

[11] **Patent Number: 5,899,835**

[45] **Date of Patent: May 4, 1999**

[54] **MULTIFUNCTIONAL TRAINING DEVICE**

[76] Inventor: **Dennis C. Puranda**, 129-51 134th St., South Ozone Park, N.Y. 11420

[21] Appl. No.: **08/958,036**

[22] Filed: **Oct. 27, 1997**

[51] **Int. Cl.**[6] **A63B 69/36**

[52] **U.S. Cl.** **482/90**; 482/83; 482/87

[58] **Field of Search** 482/83, 87, 90; 472/441, 445

[56] **References Cited**

U.S. PATENT DOCUMENTS

2,085,161	6/1937	Kraus	482/90
4,077,624	3/1978	Feaser .	
4,434,980	3/1984	Babineaux .	
4,564,194	1/1986	Lebowitz .	
4,681,318	7/1987	Lay	482/90
5,046,724	9/1991	Sotomayer .	

FOREIGN PATENT DOCUMENTS

3203044	11/1982	Germany	482/90

Primary Examiner—Jerome Donnelly
Attorney, Agent, or Firm—Michael I. Kroll

[57] **ABSTRACT**

A multifunctional training device (**10**) comprising a base (**12**) adapted to be placed upon a horizontal support surface (**14**). A stanchion (**16**) is also provided. A main coil spring (**18**) has two ends (**20**) and (**22**). The first end (**20**) is fixedly attached to the base (**12**), while the second end (**22**) is fixedly attached to the stanchion (**16**). A body bag unit (**24**) is removably attachable onto the stanchion (**16**) to receive strikes from a trainee. A punching bag striking unit (**26**) is removably attachable onto a top end (**28**) of the stanchion (**16**) to receive strikes from the trainee.

31 Claims, 9 Drawing Sheets

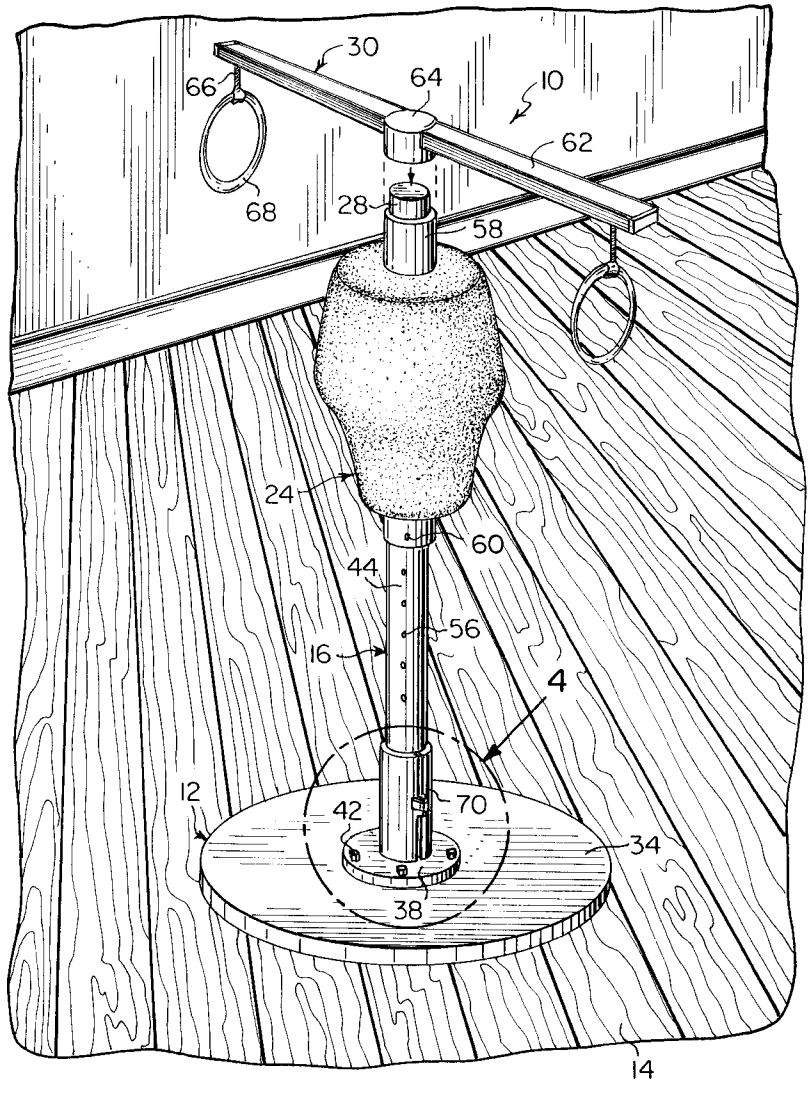

Fig. 1

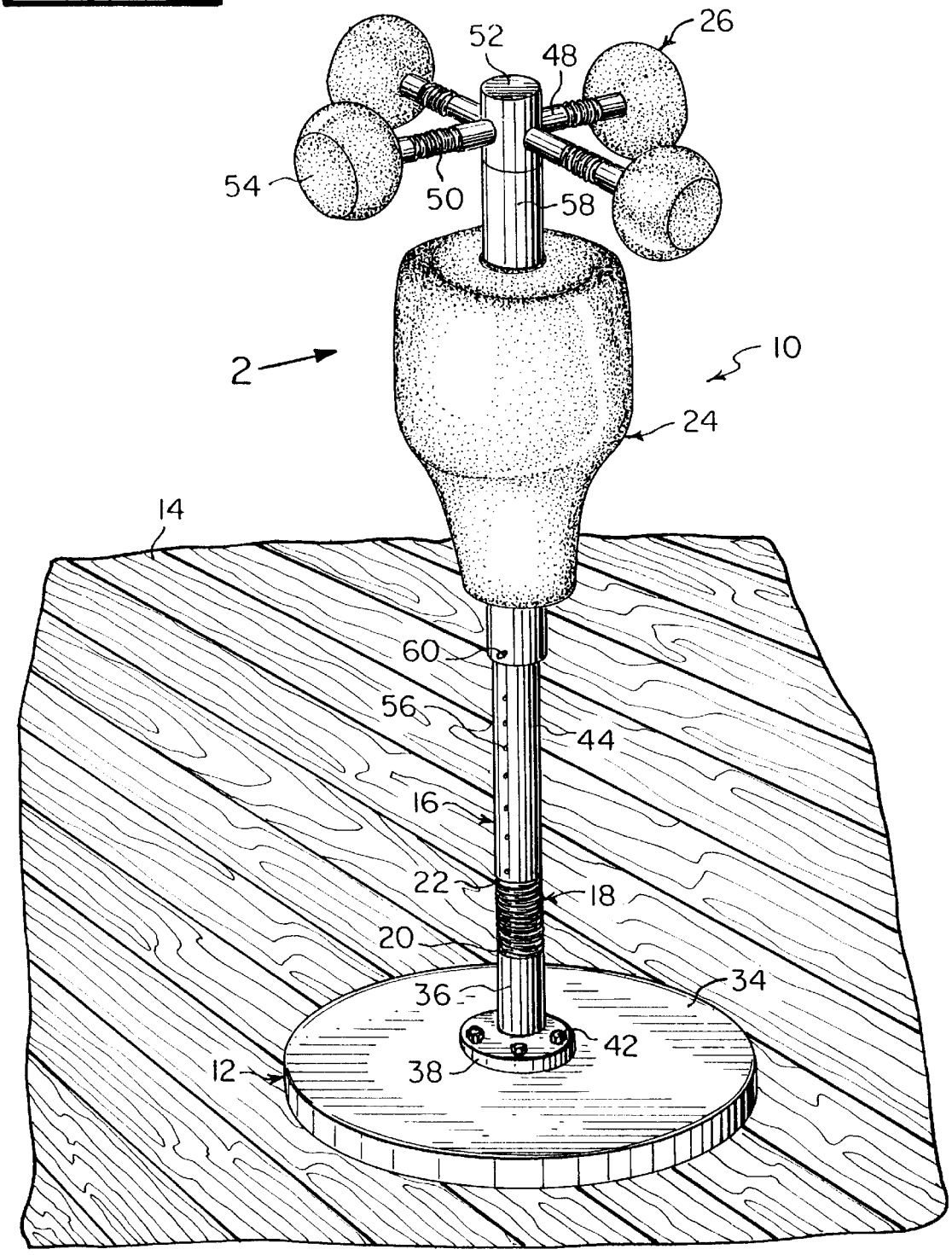

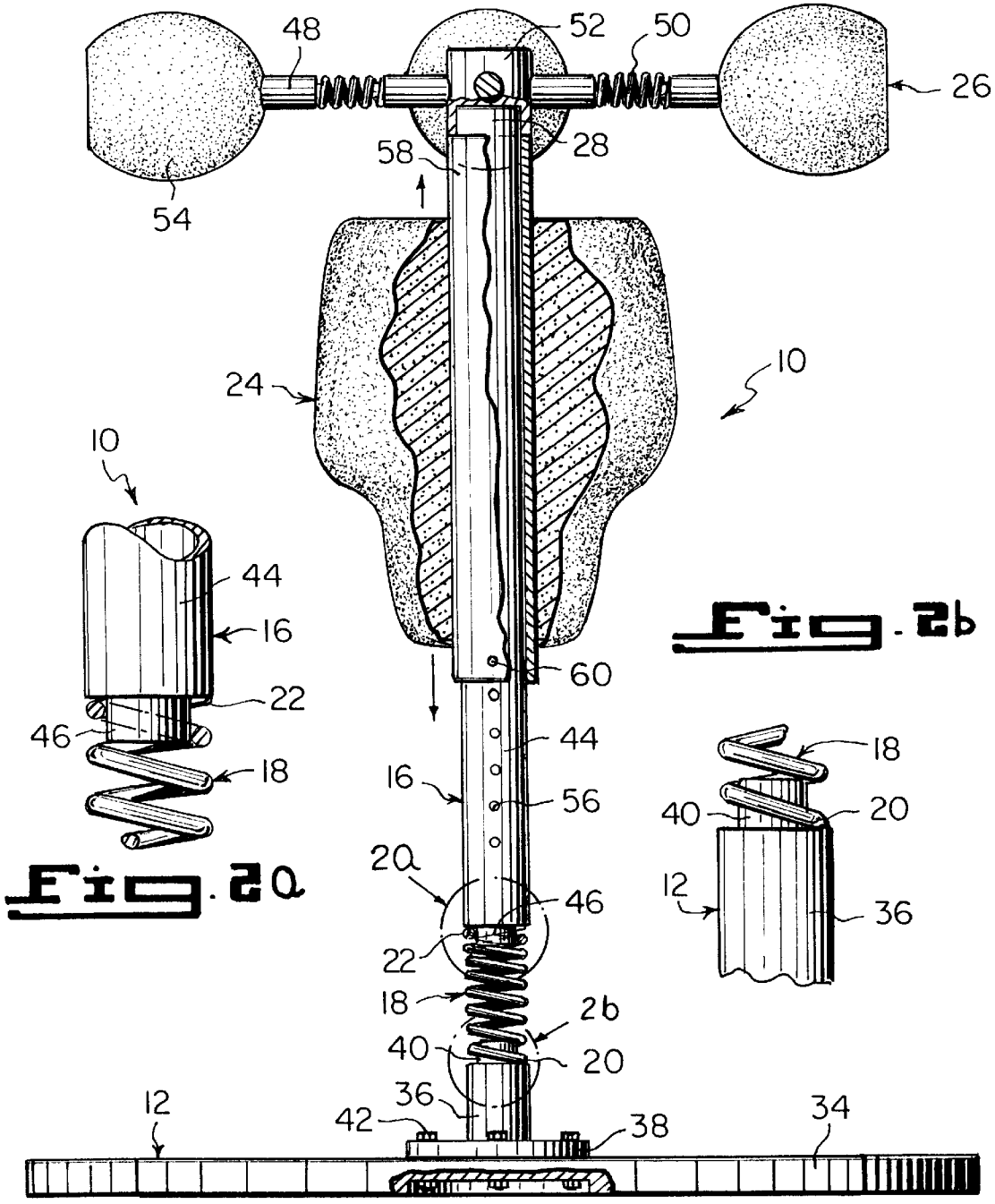

Fig. 2a

Fig. 2b

Fig. 2

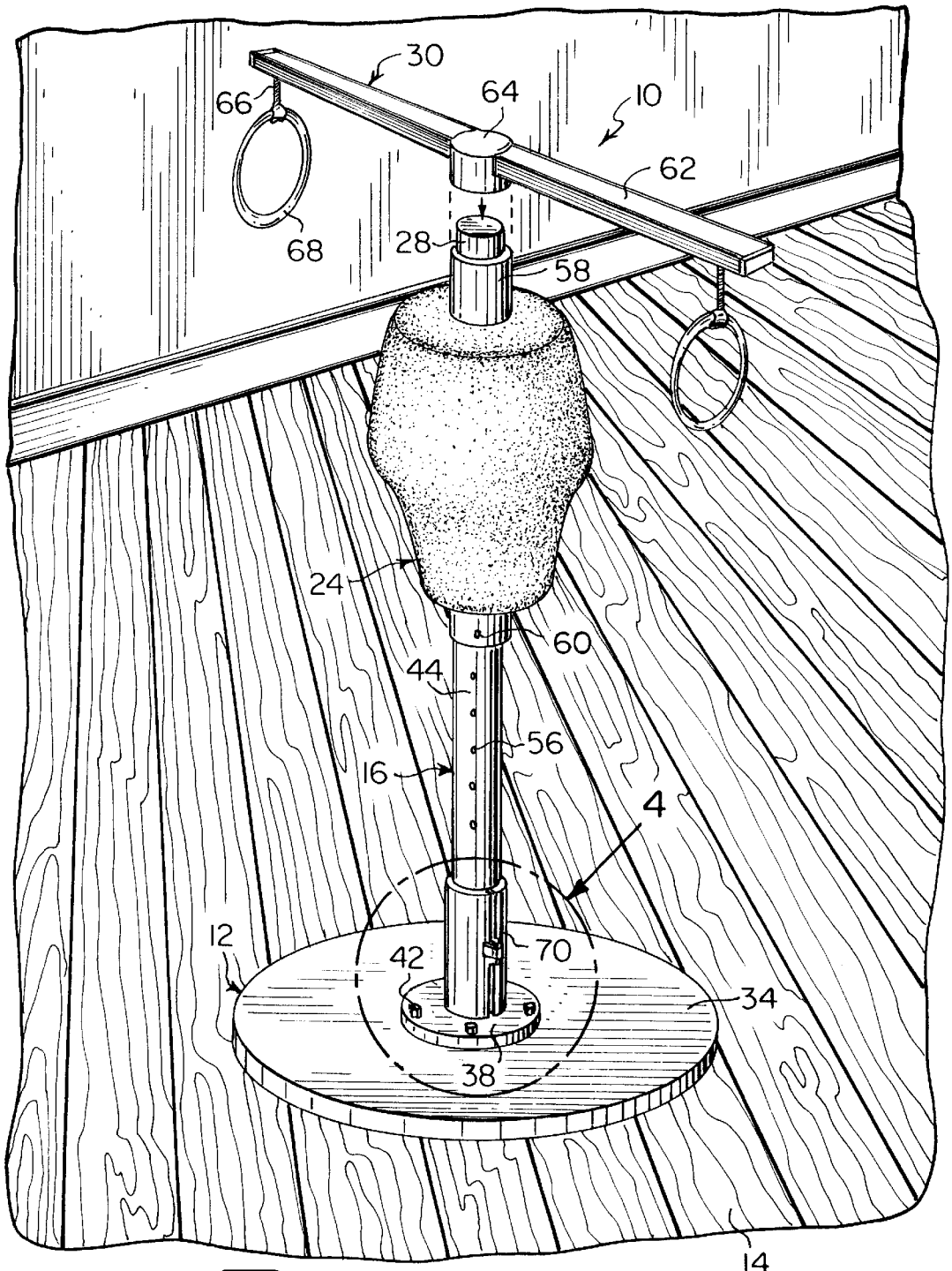

Fig. 3

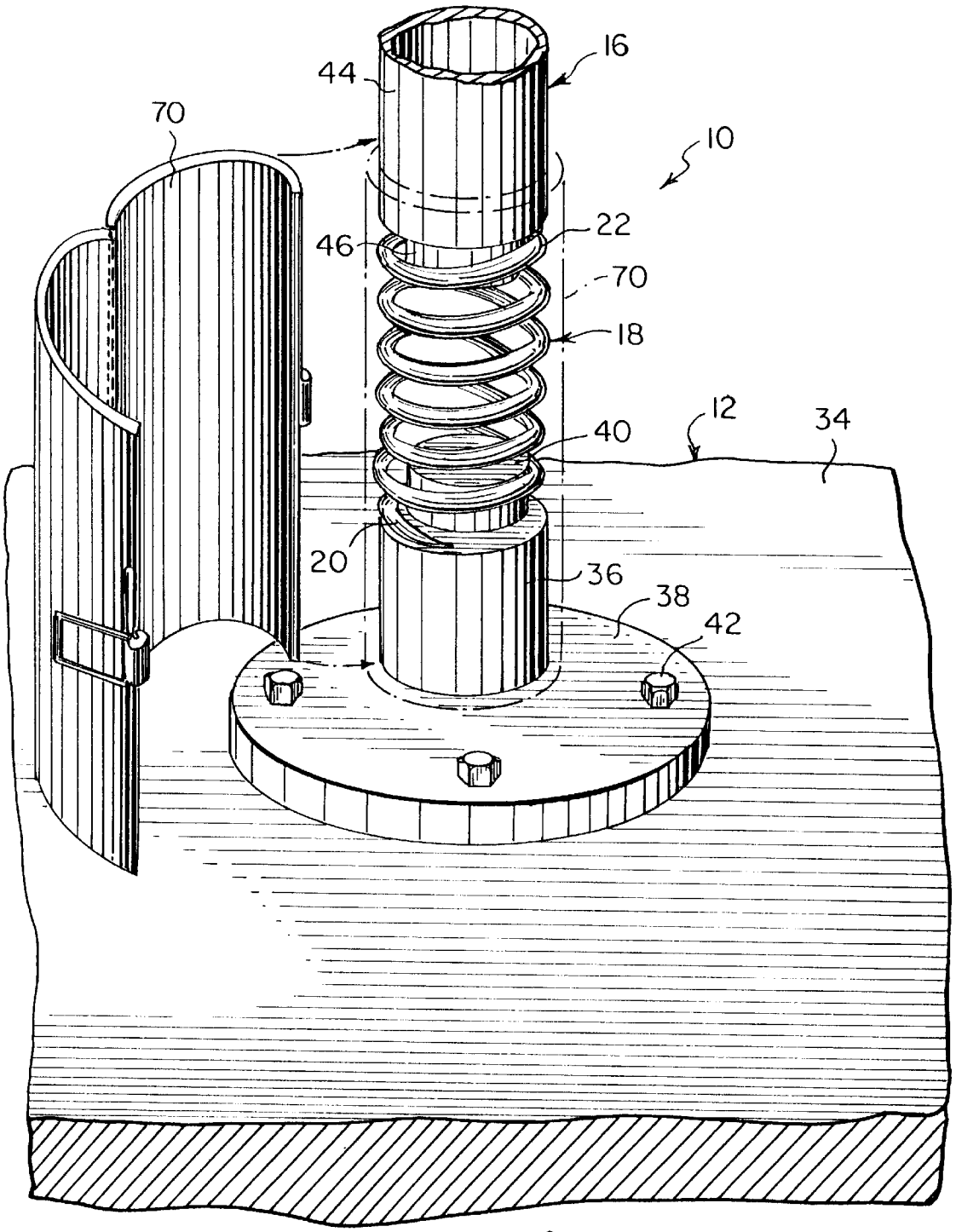

Fig. 4

(SPRING IMMOBILIZER FOR USE WITH "T" BAR)

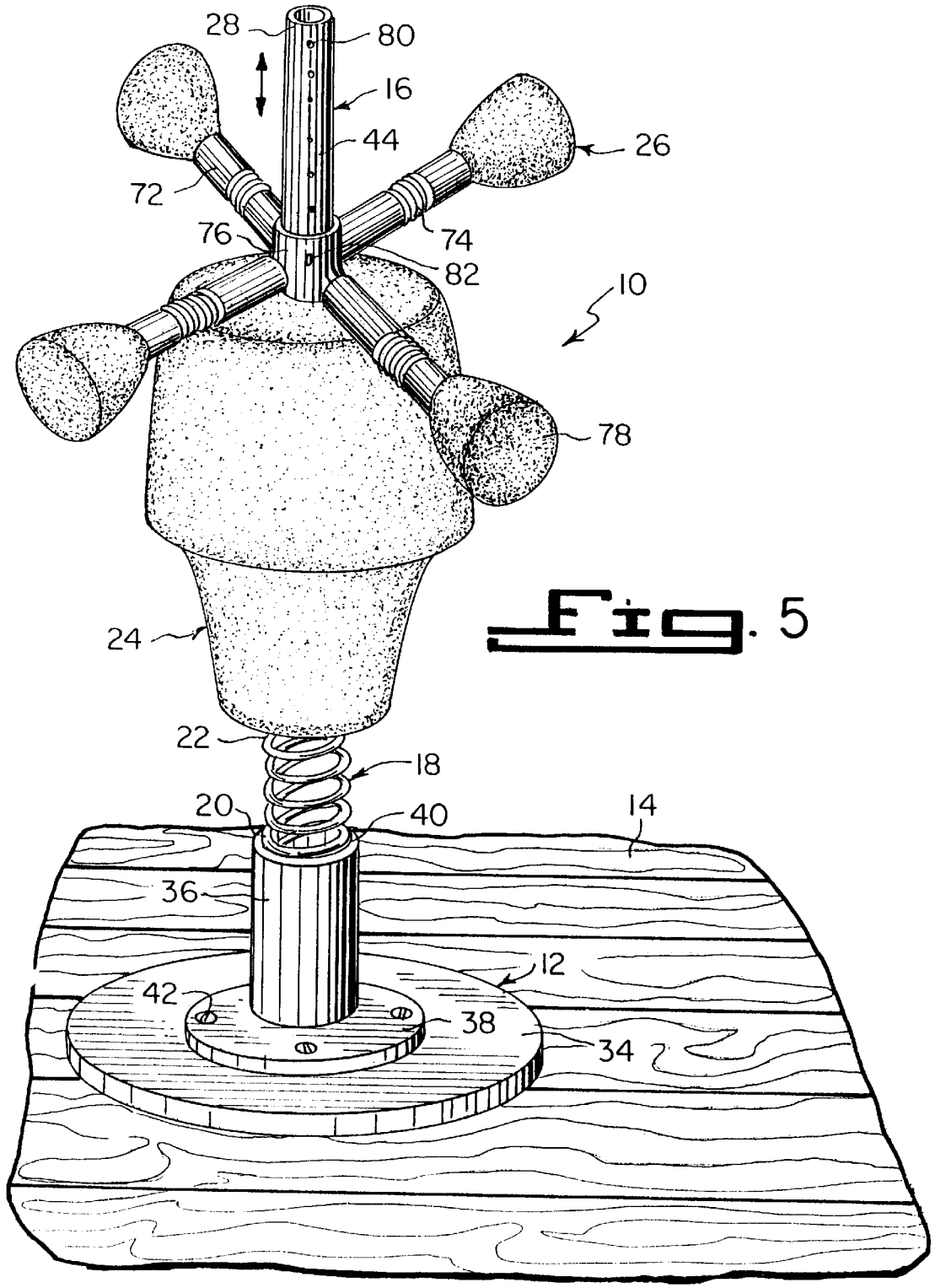

Fig. 5

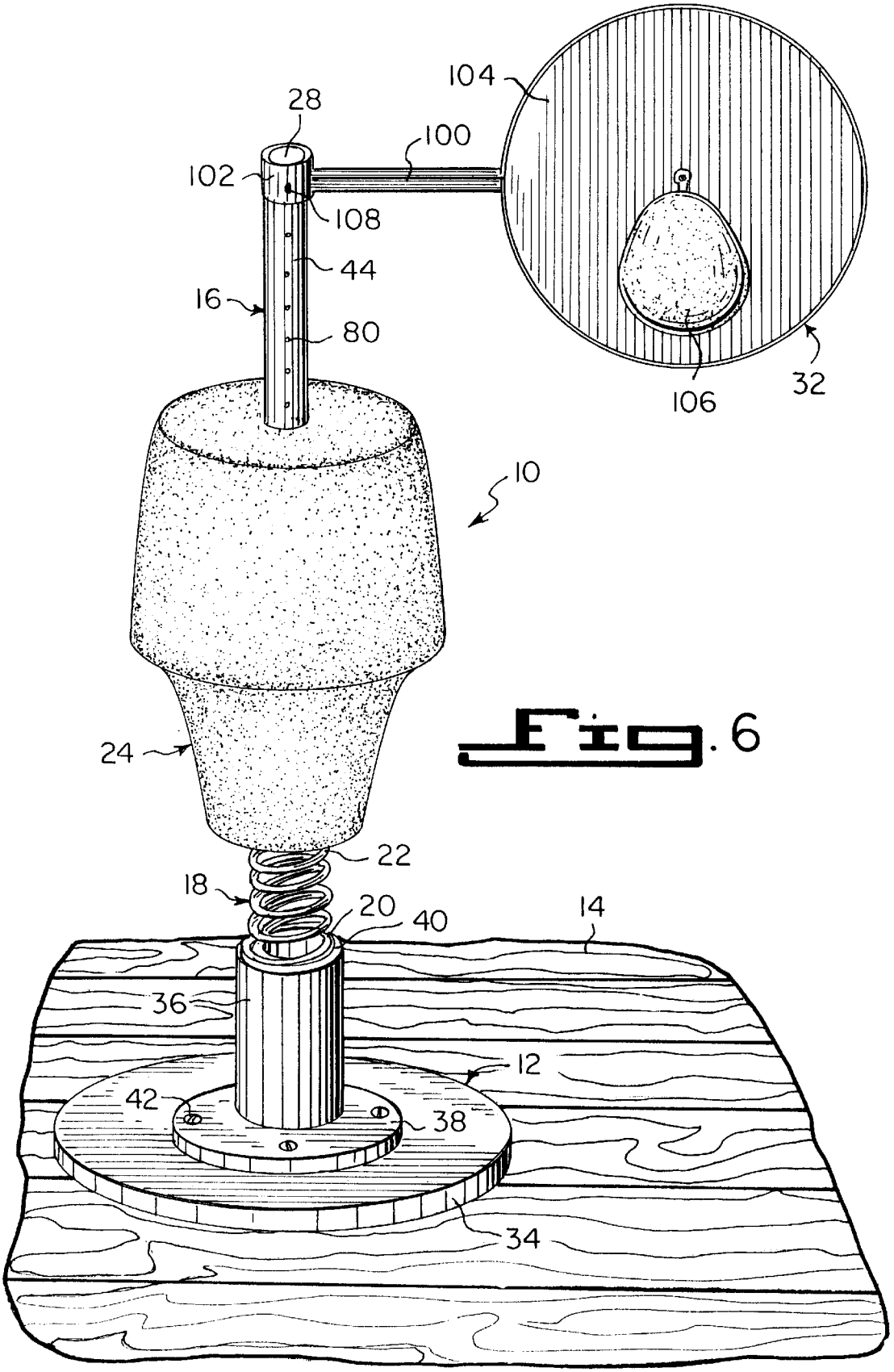

Fig. 6

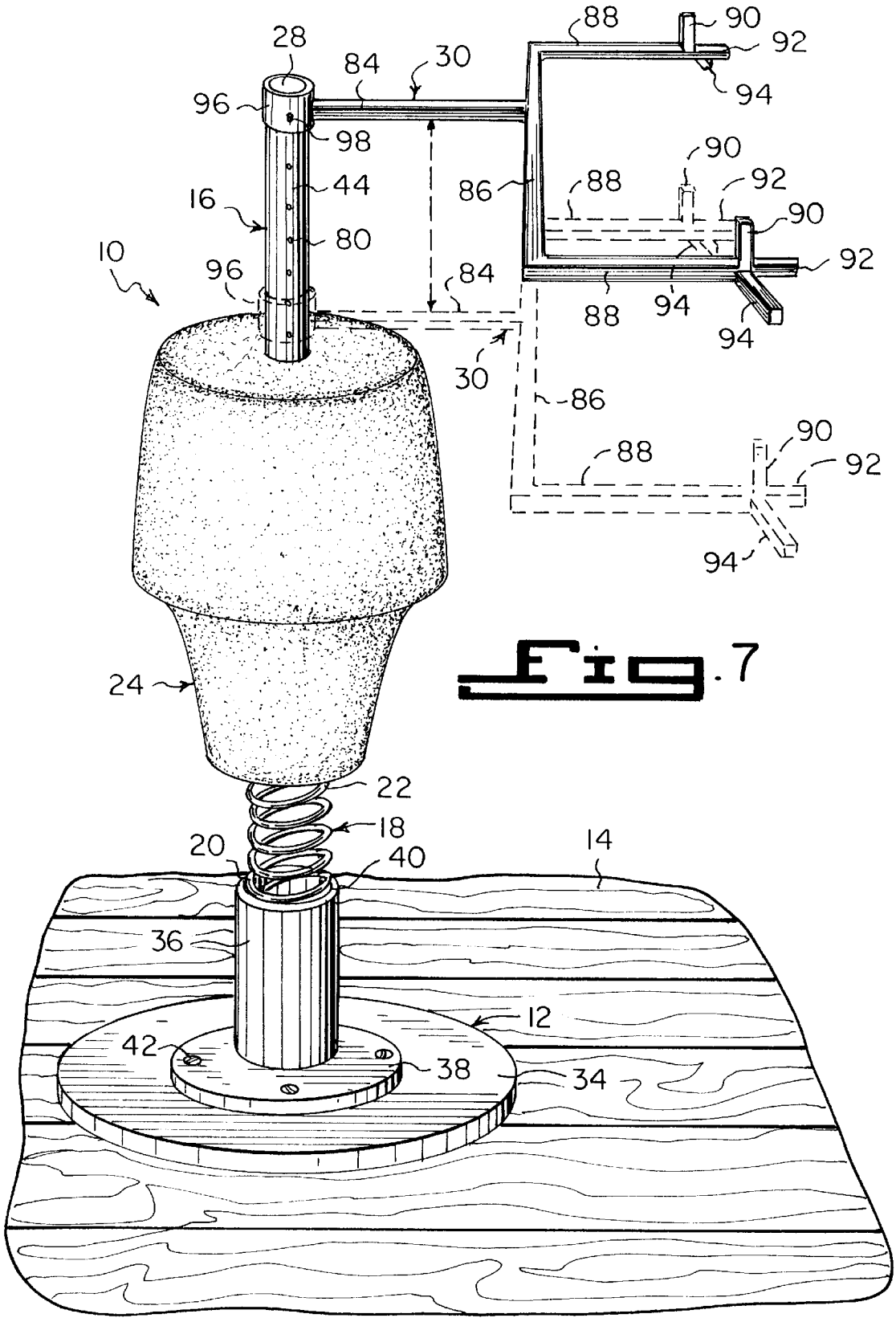
28
84
30
88
90
92
94
96
98
44
16
80
86
88
90
92
90
92
10
96
84
88
94
94
30
86
88
90
92
94
24
22
18
20
40
14
36
12
42
38
34

Fig. 7

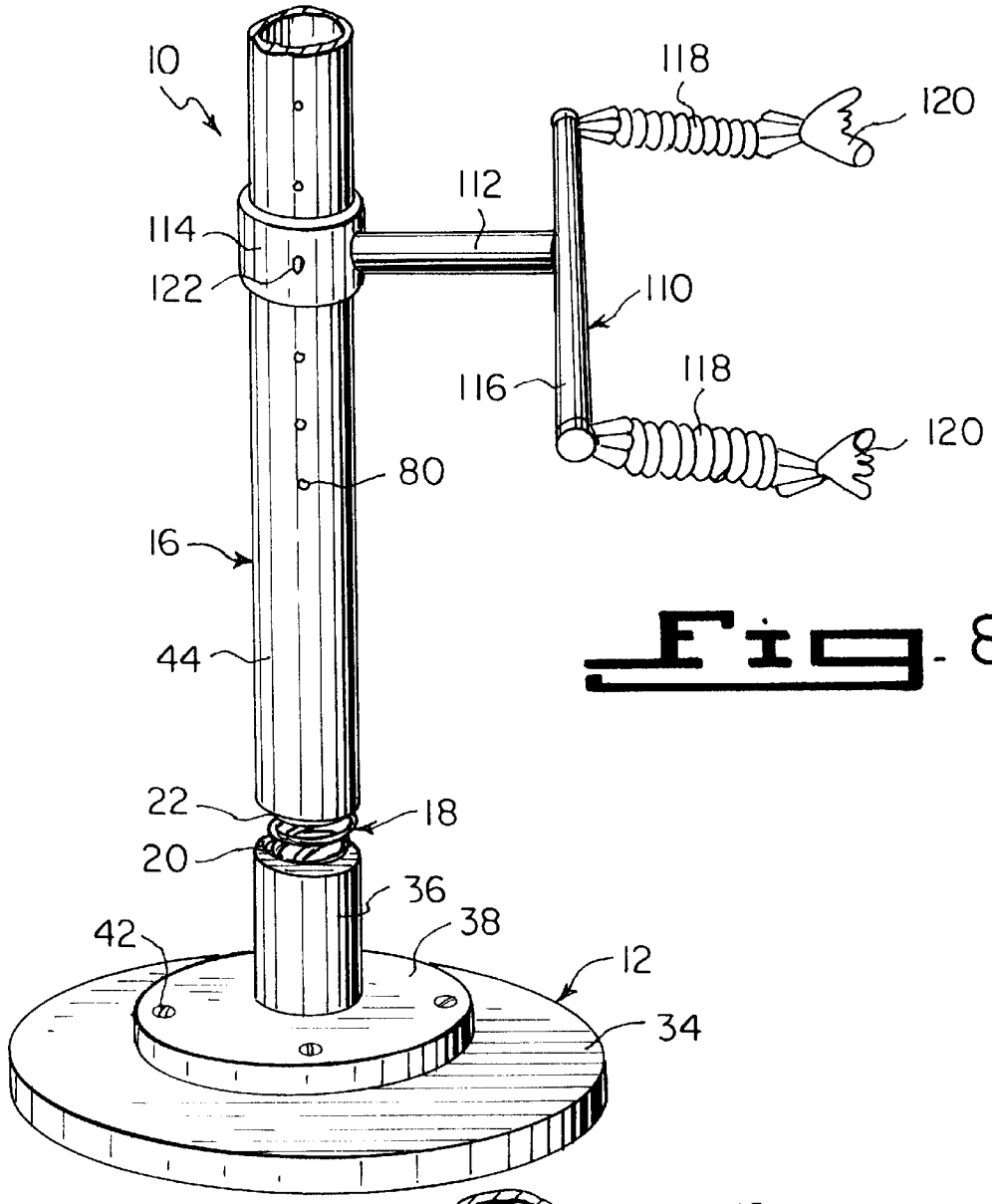
10
118
120
112
114
122
110
116
118
120
80
16
44
22
18
20
36
38
42
12
34

Fig. 8

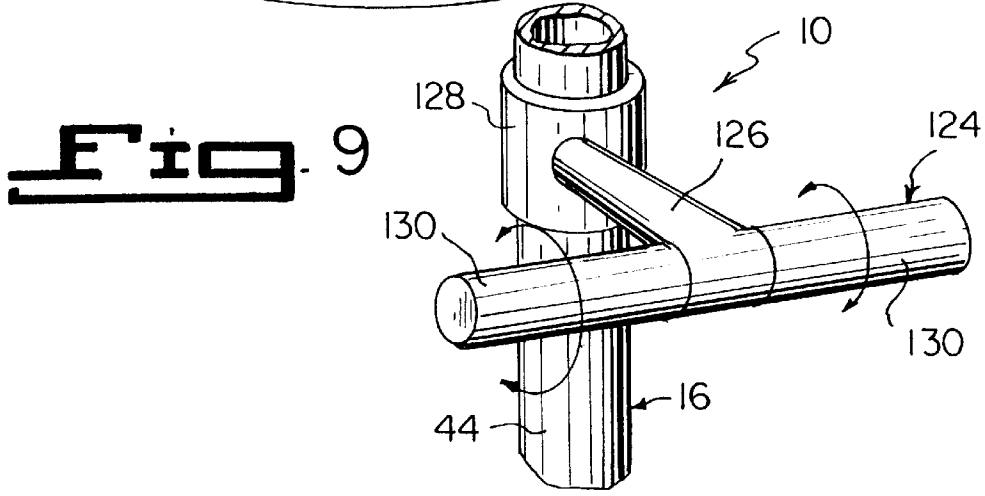
10
128
126
124
130
130
16
44

Fig. 9

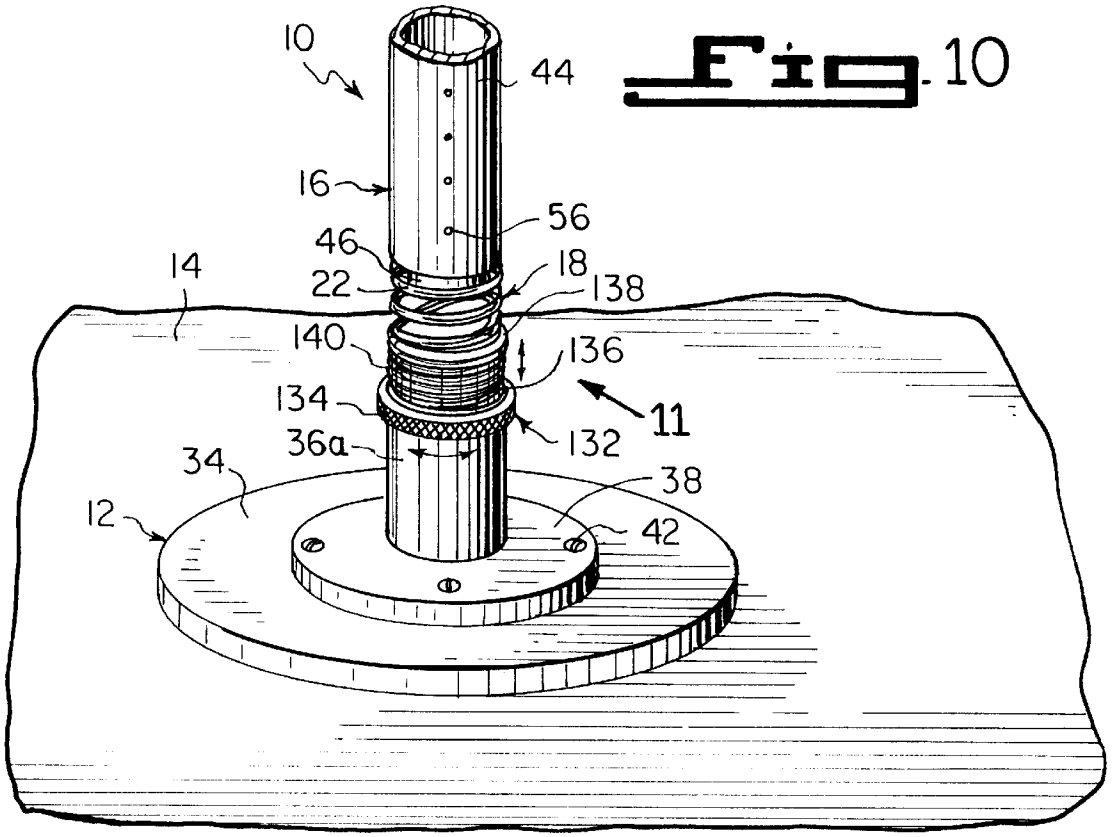
10
44
16
56
46
18
14
22
138
140
136
134
11
132
36a
34
38
12
42

Fig. 10

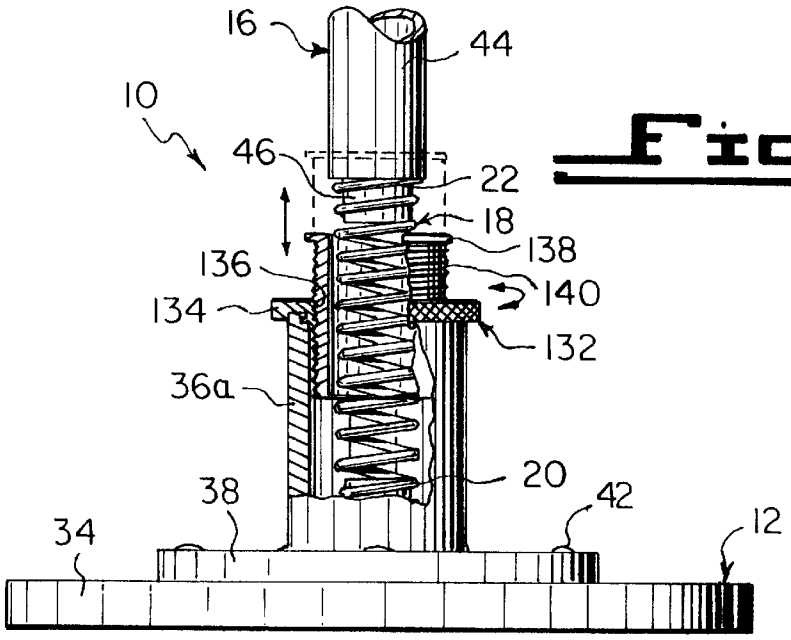
16
44
10
46
22
18
138
136
140
134
132
36a
20
38
42
34
12

Fig. 11

MULTIFUNCTIONAL TRAINING DEVICE

DESCRIPTION OF THE PRIOR ART

Numerous striking apparatuses have been provided in prior art. For example, U.S. Pat. Nos. 4,077,624 to Feaser; 4,434,980 to Babineaux; 4,564,192 to Lebowitz and 5,046,724 to Sotomayer all are illustrative of such prior art. While these units may be suitable for the particular purpose to which they address, they would not be as suitable for the purposes of the present invention as heretofore described.

Feaser, David D.

Striking Device for Training in Martial Arts

U.S. Pat. No. 4,077,624

A striking device for use by a trainee in karate, boxing, etc., to simulate an opponent. Target elements are suspended by a cord from a fixed overhead position and pivoted rod-mounted response elements are balanced between the target elements. When the trainee strikes the target elements, the response elements move in an unpredictable manner to strike back at the trainee.

Babineauxe Bernard J.

Boxing Device that Fights Back

U.S. Pat. No. 4,434,980

A boxing device that fights back is disclosed which comprises a coupling suspendable from rigid upper supporting structure, a resilient boxing bag suspended from the coupling and attachable to rigid lower supporting structure, and a pair of arms with their upper ends attached to the coupling and their lower ends free to swing arcutately forward and upward towards an attacker in response to the attacker's blows upon the resilient boxing bag. A second resilient boxing bag, also attachable to the rigid lower supporting structure, may be suspended below the first bag.

Lebowitz, Leizer

Partial Arts Training Apparatus and Method

U.S. Pat. No. 4,564,192

A training apparatus and method for training a martial arts student. A pair of simulated limbs are designed to strike blows against the student in a way that requires great skill on the part of the student to defend against the blows. The blows are directed at the student with considerable force, and from a variety of different angles, thus requiring great dexterity on the part of the student to defend against the blow. The limb members are supported in a way that allows them many degrees of movement. Specifically, the limb members are each connected for universal movement relative to a support. In addition, each of the limb members can pivot relative to the means that connects it for universal movement relative to the support. Still further, the support itself has several degrees of movement to provide additional ranges of movement for the limb members. A spring arrangement resiliently biases the limb members towards a neutral position relative to a student positioned in a striking area. The spring arrangement allows one limb member to recoil relative to the other limb member when a blow is delivered against the one limb member from the striking area. The spring arrangement is designed so that when the one limb member recoils, it applies a resilient follow-up force to the other limb member that causes the other limb member to strike a return blow at a student in the striking area.

First boxers boxing bag. Such device provides unexpected response to another fighter's punches simulating movements of opponent boxers in a boxing or sparing match. In addition, the invention may be utilized by a single boxer, in which case, it responds similarly to presently commonly available punching bags.

SUMMARY OF THE INVENTION

A primary object of the present invention is to provide a multifunctional training device that will overcome the shortcomings of the prior art devices.

Another object is to provide a multifunctional training device that is specialized equipment which functions as a complete workout system, to be utilized by a trainee in the martial arts, boxing and kick boxing fields, so that the trainee can use maximum force without inflicting injury to another person.

An additional object is to provide a multifunctional training device in which interchangeable components are capable of transforming the device into other types of exercise equipment to be used by the trainee for conditioning purposes.

A further object is to provide a multifunctional training device that is simple and easy to use.

A still further object is to provide a multifunctional training device that is economical in cost to manufacture.

Further objects of the invention will appear as the description proceeds.

To the accomplishment of the above and related objects, this invention may be embodied in the form illustrated in the accompanying drawings, attention being called to the fact, however, that the drawings are illustrative only, and that changes may be made in the specific construction illustrated and described within the scope of the appended claims.

BRIEF DESCRIPTION OF THE DRAWING FIGURES

Various other objects, features and attendant advantages of the present invention will become more fully appreciated as the same becomes better understood when considered in conjunction with the accompanying drawings, in which like reference characters designate the same or similar parts throughout the several views, and wherein;

FIG. **1** is a perspective view of a first embodiment of the present invention with a punching bag striking unit attached thereon.

FIG. **2** is an elevational view taken in the direction of arrow **2** in FIG. **1**, with parts broken away and in section.

FIG. **2***a* is an enlarged elevational view of an area in FIG. **2**, as indicated by arrow **2***a*.

FIG. **2***b* is an enlarged elevational view of an area in FIG. **2**, as indicated by arrow **2***b*.

FIG. **3** is a perspective view of the first embodiment with a T-bar unit ready to be installed thereon.

FIG. **4** is an enlarged perspective view of an area in FIG. **3**, as indicated by arrow **4**, showing the spring immobilizer ready to be installed thereto.

FIG. **5** is a perspective view of a second embodiment of the present invention with a modified punching bag striking unit of four pieces attached thereon.

FIG. **6** is a perspective view of the second embodiment with a speed bag striking unit attached thereon.

FIG. **7** is a perspective view of the second embodiment with an alternate T-bar unit attached thereon.

FIG. **8** is a perspective view of the second embodiment with parts broken away, the body bag unit removed and a shadow boxing strength trainer unit attached thereon.

FIG. **9** is a perspective view of a portion of the stanchion of the second embodiment with a wrist and forearm strengthener unit attached thereon.

FIG. **10** is an enlarged perspective view similar to FIG. **4**, showing a tension adjuster for the main coil spring.

FIG. **11** is an elevational view taken in the direction of arrow **11** in FIG. **10**, with parts broken away and in section.

Similar reference characters denote corresponding features consistently throughout the attached drawings.

DETAILED DESCRIPTION OF THE PREFERRED EMBODIMENTS

Turning now descriptively to the drawings, in which similar reference characters denote similar elements throughout the several views FIGS. **1** through **11** illustrate the present invention being a multifunctional training device **10**. With regard to the reference numerals used, the following numbering is used throughout the various drawing figures.

10	multifunctional training device
12	base of 10
14	horizontal support surface
16	stanchion of 10
18	main coil spring of 10
20	first end of 18
22	second end of 18
24	body bag unit of 10
26	punching bag striking unit of 10
28	top end of 16
30	T-bar unit of 10
32	speed bag unit of 10
34	platform of 12
36	stub post of 12
36a	hollow stub post of 12
38	mounting flange on 36
40	top annular seat on 36
42	fastener of 12
44	elongate cylindrical pipe for 16
46	bottom annular seat of 16
48	arm of 26
50	coil spring of 26
52	cap of 26
54	punching bag of 26
56	adjustment hole in 16
58	elongate sleeve in 24
60	lock pin in 58
62	arm of 30
64	cap of 30
66	flexible cord of 30
68	ring of 30
70	spring immobilizer of 30
72	arm of 26
74	coil spring of 26
76	collar of 26
78	punching bag of 26
80	adjustment hole in 16
82	lock pin of 26 in 76
84	arm of 30
86	forked end of 84
88	prong of 86
90	first hand grip on 88
92	second hand grip on 88
94	third hand grip on 88
96	collar of 30

-continued

98	lock pin of 30 in 96
100	arm of 32
102	collar of 32
104	back board of 32 on 100
106	speed bag of 32 on 104
108	lock pin of 32 in 102
110	show boxing strength trainer unit of 10
112	arm of 110
114	collar of 110
116	cross bar of 110
118	elastic expansion cord of 110
120	half shaped glove of 110
122	lock pin of 110 in 114
124	wrist and forearm strengthener unit of 10
126	arm of 124
128	collar of 124
130	lock pin of 124 (not shown)
132	tension adjuster for 18
134	knurled collar of 132
136	internally threaded aperture in 134
138	spring support collar of 132
140	externally threaded circumference of 138

The multifunctional training device **10** comprises a base **12** adapted to be placed upon a horizontal support surface **14**, such as a floor. A stanchion **16** is provided. A main coil spring **18** has two ends **20** and **22**. The first end **20** is fixedly attached to the base **12**, while the second end **22** is fixedly attached to the stanchion **16**. A body bag unit **24** is removably attachable onto the stanchion **16**, to receive strikes from a trainee. A punching bag striking unit **26** is removably attachable onto a top end **28** of the stanchion **16**, to receive strikes from the trainee.

A T-bar unit **30** is removably attachable onto the top end **28** of the stanchion **16**, so that the trainee can do pull-up exercises for the chest and backs. A speed bag unit **32** is also removably attachable onto the top end **28** of the stanchion **16**, to receive punches from the trainee.

The base **12** includes a platform **34** which sits upon the horizontal support surface **14**. A stub post **36** has a mounting flange **38** at a bottom end and an annular seat **40** at a top end. A plurality of fasteners **42** affix the mounting flange **38** centrally to the platform **34**, so that the top annular seat **40** can be fixedly attached to the first end **20** of the main coil spring **18**.

The stanchion **16** is an elongate cylindrical pipe **44** having an annular seat **46** at a bottom ends so that the bottom annular seat **46** can be fixedly attached to the second end **22** of the main coil spring **18**. The body bag unit **24** is curved in shape similar to a human torso with sides, back and front being identical, to give better leverage to the trainee with uppercuts and hooks to the body, unlike a traditional rounded body bag.

The punching bag striking unit **26**, as shown in FIGS. **1** and **2**, consists of a plurality of arms **48**. A plurality of coil springs **50** are provided, wherein each coil spring **50** is intermediately carried in each arm **48**. A cap **52** is sized to fit upon the top end **28** of the stanchion **16**, for securing in a removable manner the arms **48** radially about the top end **28** of the stanchion **16**. A plurality of punching bags **54** are provided. Each punching bag **54** is attached to a distal free end of each arm **48**, to allow for flexibility and freedom of movement for the trainee around the punching bag striking unit **26**, providing the impression of an opponent's head being available at all angles, which when struck imitates natural head movements.

The stanchion **16** has a plurality of longitudinally spaced apart adjustment holes **56**. An elongate sleeve **58** extends

centrally through the body bag unit **24** and is affixed thereto. The elongate sleeve **58** can slide upon the stanchion **16**. A lock pin **60** in the elongate sleeve **58** can engage with any one of the adjustment holes **56**, so as to adjust the height of the body bag unit **24** with respect to the stanchion **16** to accommodate the trainee. The body bag unit **24** is also removable, so that each of the other units can be used without the body bag unit **24** being attached onto the stanchion **16**.

The T-bar unit **30**, as shown in FIG. **3**, comprises a pair of arms **62**. A cap **64** sized to fit upon the top end **28** of the stanchion **16** is for securing in a removable manner the arms **62** in an opposed position radially about the top end **28** of the stanchion **16**. A pair of flexible cords **66** are provided. Each flexible cord **66** will hang down from a distal free end of each arm **62**. A pair of rings **68** are also provided, whereby each ring **68** is affixed to one flexible cord **66**. A spring immobilizer **70** fits about the main coil spring **18**, to maintain the stanchion **16** in a vertical upright stationary position, to allow the trainee to use the T-bar unit **30** safely.

The punching bag striking unit **26**, as shown in FIG. **5**, includes a plurality of arms **72**. A plurality of coil springs **74** are provided. Each coil spring **74** is intermediately carried in each arm **72**. A collar **76** sized to fit over the top end **28** of the stanchion **16**, is for holding in a removable manner the arms **72** radially about the stanchion **16**. A plurality of punching bags **78** are provided. Each punching bag **78** is attached to a distal free end of each arm **72**, to allow for flexibility when each punching bag **78** is struck by the trainee. The stanchion **16** has a plurality of longitudinally spaced apart adjustment holes **80**. A lock pin **82** is in the collar **76** which can engage with any one of the adjustment holes **80**, so as to adjust the height of the punching bags **78** with respect to the stanchion **16** to accommodate the trainee.

The T-bar unit **30**, shown in FIG. **7**, contains an arm **84** having a forked end **86** with two prongs **88** and three hand grips **90**, **92**, **94** on each prong **88**. The first hand grip **90** faces upward, the second hand grip **92** faces directly ahead and the third hand grip **94** faces outward. A collar **96** sized to fit over the top end **28** of the stanchion **16**, is for holding in a removable manner the arm **84** horizontally out from the stanchion **16**. The stanchion **16** has the plurality of longitudinally spaced apart adjustment holes **80**. A lock pin **98** in the collar **96** can engage with any one of the adjustment holes **80**, so as to adjust the height of the hand grips **90**, **92**, **94** with respect to the stanchion **16** to accommodate the trainee. When the collar **96** is retained in a lower position on the stanchion **16**, as shown in dotted lines, the trainee can do leg raise and dip exercises for chest and triceps. When the collar **96** is retained in an upper position on the stanchion **16** the trainee can do biceps, shoulder and back pull-ups.

The speed bag unit **32** shown in FIG. **6**, comprises an arm **100**. A collar **102** sized to fit over the top end **28** of the stanchion **16**, is for holding in a removable manner the arm **100** horizontally out from the stanchion **16**. A back board **104** is vertically affixed to a distal free end of the arm **100**. A speed bag **106** is suspended on the back board **104**. The stanchion **16** has the plurality of longitudinally spaced apart adjustment holes **80**. A lock pin **108** in the collar **102** can engage with any one of the adjustment holes **80**, so as to adjust the height of the speed bag **106** with respect to the stanchion **16** to accommodate the trainee.

A shadow boxing strength trainer unit **110**, shown in FIG. **8**, is removably attachable onto the stanchion **16**, so that the trainee can do arm extenuation exercises both for direct forward, extend downward and upward arm flex exercises, so as to primarily imitate shadow boxing movements instead of simply punching at wind. The shadow boxing strength trainer unit **110** consists of an arm **112**. A collar **114** is sized to fit over a top end of the stanchion **16**, for holding in a removable manner the arm **112** horizontally out from the stanchion **16**. A cross bar **116** is transversely affixed to a distal free end of the arm **112**. A pair of elastic expansion cords **118** are provided Each cord **118** is affixed at a first end and at a right angle to one end of the cross bar **112**. A pair of half shaped gloves **120** are also provided. Each glove **120** is affixed to a second end of one cord **118** to be engaged by the trainee. The stanchion **16** has a plurality of longitudinally spaced apart adjustment holes **80**. A lock pin **122** in the collar **114** can engage with any one of the adjustment holes **80**, so as to adjust the height of the gloves **120** on the cords **118**, to accommodate the trainee.

A wrist and forearm strengthener unit **124** shown in FIG. **9**, is removably attachable onto the stanchion **16** that will enable the trainee to strengthen the wrists and forearms. The wrist and forearm strengthener unit **124** includes an arm **126**. A collar **128** is sized to fit over a top end of the stanchion **16**, for holding in a removable manner the arm **126** horizontally out from the stanchion **16**. A pair of spring biased rotatable hand grips **130** are transversely affixed to a distal free end of the arm **126** to be gripped and turned forward and backward by the trainee. The stanchion **16** has a plurality of the longitudinally spaced apart adjustment holes **80**. A lock pin **130** (not shown) in the collar can engage with any one of the adjustment holes **80**, so as to adjust the height of the hand grips **130**, to accommodate the trainee.

The multifunctional training device **10**, shown in FIGS. **10** and **11**, can further include a tension adjuster **132** for the main coil spring **18**, so as to control movement of the stanchion **16** with respect to the base **12**. The tension adjuster **132** contains a knurled collar **134** rotatively carried on a top end of a hollow stub post **36***a* of the base **12**. The knurled collar **134** has an internally threaded aperture **136**. A spring support collar **138** has an externally threaded circumference **140**, that threads into the knurled collar **134**. When the knurled collar **134** is turned it will raise and lower the spring support collar **138** to effectively increase and reduce spring action of the main coil spring **18**, which extends into the hollow stub post **36***a*.

It will be understood that each of the elements described above, or two or more together may also find a useful application in other types of methods differing from the type described above.

While certain novel features of this invention have been shown and described are pointed out in the annexed claims, it is not intended to be limited to the details above, since it will be understood that various omissions, modifications, substitutions and changes in the forms and details of the device illustrated and in its operation can be made by those skilled in the art without departing in any way from the spirit of the present invention.

Without further analysis, the foregoing will so fully reveal the gist of the present invention that others can, by applying current knowledge, readily adapt it for various applications without omitting features that, from the standpoint of prior art, fairly constitute essential characteristics of the generic or specific aspects of this invention.

What is claimed is new and desired to be protected by Letters Patent is set forth in the appended claims:

1. A multifunctional training device in kit form comprising:

a) a base adapted to be placed upon a horizontal support surface;

b) a stanchion;

c) a main coil spring having two ends, in which said first end is fixedly attached to said base, while said second end is fixedly attached to said stanchion;

d) a body bag unit removably attachable onto said stanchion to receive strikes from a trainee;

e) a punching bag striking unit removably attachable onto a top end of said stanchion to receive strikes from the trainee.

f) a T-bar unit removably attachable onto a top end of said stanchion so that the trainee can do pull-up exercises for the chest and back; and

g) a spring immobilizer which fits about said main coil spring to maintain said stanchion in a vertical upright stationary position, to allow the trainee to use said T-bar unit safely.

2. A multifunctional training device in kit form as recited in claim **1**, further including a speed bag unit removably attachable onto a top end of said stanchion to receive punches from the trainee.

3. A multifunctional training device in kit form as recited in claim **1**, wherein said base includes:

a) a platform which sits upon the horizontal support surface;

b) a stub post having a mounting flange at a bottomed and an annular seat at a top end; and

c) a plurality of fasteners to affix said mounting flange centrally to said platform, so that said top annular seat can be fixedly attached to said first end of said main coil spring.

4. A multifunctional training device in kit form as recited in claim **1**, wherein said stanchion is an elongate cylindrical pipe having an annular seat at a bottom end, so that said bottom annular seat can be fixedly attached to said second end of said main coil spring.

5. A multifunctional training device in kit form as recited in claim **1**, wherein said body bag unit is curved in shape similar to a human torso with sides, back and front being identical, to give better leverage to the trainee with upper cuts and hooks to the body, unlike a traditional rounded body bag.

6. A multifunctional training device in kit form as recited in claim **1**, wherein said punching bag striking unit includes.

a) a plurality of arms;

b) a plurality of coil springs, wherein each said coil spring is intermediately carried in each said arm;

c) a cap sized to fit upon at top end of said stanchion for securing in a removable manner said arms radially about the top end of said stanchion; and

d) a plurality of punching bags, wherein each said punching bag is attached to a distal free end of each said arm, to allow for flexibility and freedom of movement for the trainee around said punching bag striking unit, providing the impression of an opponent's head being available at all angles, which when struck, imitates natural head movements.

7. A multifunctional training device in kit form as recited in claim **1**, further including:

a) said stanchion having a plurality of longitudinally spaced apart adjustment holes;

b) an elongate sleeve extending centrally through said body bag unit and affixed thereto whereby said elongate sleeve can slide upon said stanchion; and

c) a lock pin in said elongate sleeve which can engage with any one of said adjustment holes, so as to adjust the height of said body bag unit with respect to said stanchion to accommodate the trainee, said body bag unit is also removable, so that each of said other units can be used without said body bag unit being attached on to said stanchion.

8. A multifunctional training device in kit form as recited in claim **1**, wherein said T-bar unit includes:

a) a pair of arms;

b) a cap sized to fit upon a top end of said stanchion for securing in a removable manner said arms in an opposed position radially about the top end of said stanchion;

c) a pair of flexible cords, whereby each said flexible cord will hang down from a distal free end of each said arm and;

d) a pair of rings, whereby each said ring is affixed to one said flexible cord.

9. A multifunctional training device in kit form as recited in claim **1**, wherein said punching bag striking unit includes:

a) a plurality of arms;

b) a plurality of coil springs, wherein each said coil spring is intermediately carried in each said arm;

c) a collar sized to fit over a top end of said stanchion, for holding in a removable manner said arms radially about said stanchion;

d) a plurality of punching bags, wherein each said punching bag is attached to a distal free end of each said arm, to allow for flexibility when each said punching bag is struck by the trainee;

e) said stanchion having a plurality of longitudinally spaced apart adjustment holes; and

f) a lock pin in said collar which can engage with any one of said adjustment holes, so as to adjust the height of said punching bags with respect to said stanchion to accommodate the trainee.

10. A multifunctional training device in kit form as recited in claim **1**, wherein said T-bar unit includes:

a) an arm having a forked end with two prongs and three hand grips on each said prong, said first hand grip facing upward, said second hand grip facing directly ahead and said third hand grip facing outward;

b) a collar sized to fit over a top end of said stanchion for holding in a removable manner said arm horizontally out from said stanchion;

c) said stanchion having a plurality of longitudinally spaced apart adjustment holes; and

d) a lock pin in said collar which can engage with any one of said adjustment holes, so as to adjust the height of said hand grips with respect to said stanchion to accommodate the trainee, whereby when said collar is retained in a lower position on said stanchion, the trainee can do leg raise and dip exercises for chest and triceps, when said collar is retained in an upper position on said stanchion, the trainee can do biceps, shoulder and back pull-ups.

11. A multifunctional training device in kit form as recited in claim **2**, wherein said speed bag unit includes:

a) an arm;

b) a collar sized to fit over a top end of said stanchion for holding in a removable manner said arm horizontally out from said stanchion;

c) a back board vertically affixed to a distal free end of said arm;

d) a speed bag suspended on said back board;

e) said stanchion having a plurality of longitudinally spaced apart adjustment holes; and

f) a lock pin in said collar which can engage with any one of said adjustment holes, so as to adjust the height of said speed bag with respect to said stanchion to accommodate the trainee.

12. A multifunctional training device in kit form as recited in claim **1**, further including a shadow boxing strength trainer unit removably attachable onto said stanchion, so that the trainee can do arm extenuation exercises both for direct forward, extend downward and upward arm flex exercises, so as to primarily imitate shadow boxing movements instead of simply punching at wind.

13. A multifunctional training device in kit form as recited in claim **12**, wherein said shadow boxing strength trainer unit includes:

a) an arm;

b) a collar sized to fit over a top end of said stanchion for holding in a removable manner said arm horizontally out from said stanchion;

c) a cross bar transversely affixed to a distal free end of said arm;

d) a pair of elastic expansion cords, each said cord affixed at a first end and at a right angle to one end of said cross bar;

e) a pair of half shaped gloves, each said glove affixed to a second end of one said cord to be engaged by said trainee;

f) said stanchion having a plurality of longitudinally spaced apart adjustment holes; and

g) a lock pin in said collar which can engage with any one of said adjustment holes, so as to adjust the height of said gloves on said cords to accommodate the trainee.

14. A multifunctional training device in kit form as recited in claim **1**, further including a wrist and forearm strengthener unit removably attachable onto said stanchion, that will enable the trainee to strengthen the wrists and forearms.

15. A multifunctional training device in kit form as recited in claim **14**, wherein said wrist and forearm strengthener unit includes.

a) an arm;

b) a collar sized to fit over a top end of said stanchion for holding in a removable manner said arm horizontally out from said stanchion;

c) a pair of spring biased rotatable hand grips transversely affixed to a distal free end of said arm to be gripped and turned forward and backward by the trainee;

d) said stanchion having a plurality of longitudinally spaced apart adjustment holes; and

e) a lock pin in said collar which can engage with any one of said adjustment holes, so as to adjust the height of said hand grips to accommodate the trainee.

16. A multifunctional training device in kit form comprising:

a) a base adapted to be placed upon a horizontal support surface;

b) a stanchion;

c) a main coil spring having two ends, in which said first end is fixedly attached to said base, while said second end is fixedly attached to said stanchion;

d) a body bag unit removably attachable onto said stanchion to receive strikes from a trainee;

e) a punching bag striking unit removably attachable onto a top end of said stanchion to receive strikes from the trainee;

f) a T-bar unit removably attachable onto a top end of said stanchion, so that the trainee can do pull-up exercises for the chest and back; and

g) a spring immobilizer which fits about said main coil spring to maintainsaid stanchion in a vertical upright stationary position, to allow the trainee to use said T-bar unit safely.

17. A multifunctional training device in kit form as recited in claim **16**, further including a speed bag unit removably attachable onto a top end of said stanchion to receive punches from the trainee.

18. A multifunctional training device in kit form as recited in claim **17**, wherein said base includes:

a) a platform which sits upon the horizontal support surface;

b) a stub post having a mounting flange at a bottom end and an annular seat at a top end; and

c) a plurality of fasteners to affix said mounting flange centrally to said platform, so that said top annular seat can be fixedly attached to said first end of said main coil spring.

19. A multifunctional training device in kit form as recited in claim **18**, wherein said stanchion is an elongate cylindrical pipe having an annular seat at a bottom end, so that said bottom annular seat can be fixedly attached to said second end of said main coil spring.

20. A multifunctional training device in kit form as recited in claim **19**, wherein said body bag unit is curved in shape similar to a human torso with sides, back and front being identical, to give better leverage to the trainee with uppercuts and hooks to the body, unlike a traditional rounded body bag.

21. A multifunctional training device in kit form as recited in claim **20**, wherein said punching bag striking unit includes:

a) a plurality of arms;

b) a plurality of coil springs, wherein each said coil spring is intermediately carried in each said arm;

c) a cap sized to fit upon at top end of said stanchion for securing in a removable manner said arms radially about the top end of said stanchion; and

d) a plurality of punching bags, wherein each said punching bag is attached to a distal free end of each said arm, to allow for flexibility and freedom of movement for the trainee around said punching bag striking unit, providing the impression of an opponent's head being available at all angles, which when struck, imitates natural head movements.

22. A multifunctional training device in kit form as recited in claim **21**, further including:

a) said stanchion having a plurality of longitudinally spaced apart adjustment holes;

b) an elongate sleeve extending centrally through said body bag unit and affixed thereto, whereby said elongate sleeve can slide upon said stanchion; and

c) a lock pin in said elongate sleeve which can engage with any one of said adjustment holes, so as to adjust the height of said body bag unit with respect to said stanchion to accommodate the trainee, said body bag unit is also removable, so that each of said other units can be used without said body bag unit being attached onto said stanchion.

23. A multifunctional training device in kit form as recited in claim **22**, wherein said T-bar unit includes:

a) a pair of arms;

b) a cap sized to fit upon a top end of said stanchion for securing in a removable manner said arms in an opposed position radially about the top end of said stanchions;

c) a pair of flexible cords, whereby each said flexible cord will hang down from a distal free end of each said arm and ;

d) a pair of rings, whereby each said ring is affixed to one said flexible cord.

24. A multifunctional training device in kit form as recited in claim **20**, wherein said punching bag striking unit includes:

a) a plurality of arms;

b) a plurality of coil springs, wherein each said coil spring is intermediately carried in each said arm;

c) a collar sized to fit over a top end of said stanchion, for holding in a removable manner said arms radially about said stanchion;

d) a plurality of punching bags, wherein each said punching bag is attached to a distal free end of each said arm, to allow for flexibility when each said punching bag is struck by the trainee;

e) said stanchion having a plurality of longitudinally spaced apart adjustment holes; and

f) a lock pin in said collar which can engage with any one of said adjustment holes, so as to adjust the height of said punching bags with respect to said stanchion to accommodate the trainee.

25. A multifunctional training device in kit form as recited in claim **24**, wherein said T-bar unit includes:

a) an arm having a forked end with two prongs and three hand grips on each said prong, said first hand grip facing upward, said second hand grip facing directly ahead and said third hand grip facing outward;

b) a collar sized to fit over a top end of said stanchion for holding in a removable manner said arm horizontally out from said stanchion;

c) said stanchion having a plurality of longitudinally spaced apart adjustment holes; and

d) a lock pin in said collar which can engage with any one of said adjustment holes, so as to adjust the height of said hand grips with respect to said stanchion to accommodate the trainee, whereby when said collar is retained in a lower position on said stanchion, the trainee can do leg raise and dip exercises for chest and triceps, when said collar is retained in an upper position on said stanchion, the trainee can do biceps, shoulder and back pull-ups.

26. A multifunctional training device in kit form as recited in claim **25**, wherein said speed bag unit includes:

a) an arm;

b) a collar sized to fit over a top end of said stanchion for holding in a removable manner said arm horizontally out from said stanchion;

c) a back board vertically affixed to a distal free end of said arm;

d) a speed bag suspended on said back board;

e) said stanchion having a plurality of longitudinally spaced apart adjustment holes; and

f) a lock pin in said collar which can engage with any one of said adjustment holes, so as to adjust the height of said speed bag with respect to said stanchion to accommodate the trainee.

27. A multifunctional training device in kit form as recited in claim **20**, further including a shadow boxing strength trainer unit removably attachable onto said stanchion, so that the trainee can do arm extenuation exercises both for direct forward, extend downward and upward arm flex exercises, so as to primarily imitate shadow boxing movements instead of simply punching at wind.

28. A multifunctional training device in kit form as recited in claim **27**, wherein said shadow boxing strength trainer unit includes:

a) an arm;

b) a collar sized to fit over a top end of said stanchion for holding in a removable manner said arm horizontally out from said stanchion;

c) a cross bar transversely affixed to a distal free end of said arm;

d) a pair of elastic expansion cords, each said cord affixed at a first end and at a right angle to one end of said cross bar;

e) a pair of half shaped gloves, each said glove affixed to a second end of one said cord to be engaged by said trainee;

f) said stanchion having a plurality of longitudinally spaced apart adjustment holes; and

g) a lock pin in said collar which can engage with any one of said adjustment holes, so as to adjust the height of said gloves on said cords to accommodate the trainee.

29. A multifunctional training device in kit form as recited in claim **28**, further including a wrist and forearm strengthener unit removably attachable onto said stanchion, that will enable the trainee to strengthen the wrists and forearms.

30. A multifunctional training device in kit form as recited in claim **29**, wherein said wrist and forearm strengthener unit includes:

a) an arm;

b) a collar sized to fit over a top end of said stanchion for holding in a removable manner said arm horizontally out from said stanchion;

c) a pair of spring biased rotatable hand grips transversely affixed to a distal free end of said arm to be gripped and turned forward and backward by the trainee;

d) said stanchion having a plurality of longitudinally spaced apart adjustment holes; and

e) a lock pin in said collar which can engage with any one of said adjustment holes, so as to adjust the height of said hand grips to accommodate the trainee.

31. A multifunctional training device in kit form comprising:

a) a base adapted to be placed upon a horizontal support surface;

b) a stanchion;

c) a main coil spring having two ends, in which said first end is fixedly attached to said base, while said second end is fixedly attached to said stanchion;

d) a body bag unit removably attachable onto said stanchion to receive strikes from a trainee;

e) a punching bag striking unit removably attachable onto a top end of said stanchion to receive strikes from the trainee.

f) a T-bar unit removably attachable onto a top end of said stanchion so that the trainee can do pull-up exercises for the chest and back; and

g) a tension adjuster for said main coil spring, so as to control movement of said stanchion with respect to said base, wherein said tension adjuster includes:

a) a knurled collar rotatively carried on a top end of a hollow stub post of said base, said knurled collar having an internally threaded aperture; and

b) a spring support collar having an externally threaded circumference that threads into said knurled collar, so that when said knurled collar is turned it will raise and lower said spring support collar to effectively increase and reduce spring action of said main coil spring, which extends into said hollow stub post.

* * * * *